RubberMulchOutlet.com
COMMERCIAL PLAYGROUNDS
SURFACING • SITE SOLUTIONS

MODEL-SPECIFIC

INSTALLATION INSTRUCTIONS

Installation Manual

Product-Specific Installation Reference

MODEL NUMBER	GUIDE LEVEL	DOCUMENT STATUS
PGP011	Model-Specific	Customer Reference Copy

Helpful Installation Note

This guide is provided for information and planning purposes. Product designs and installation requirements may change over time. Before beginning installation, please review the instructions included with your product and confirm that you are using the most current product-specific instructions. If there is any difference, follow the current instructions supplied with the product.

Need help confirming the correct guide? Contact Rubber Mulch Outlet.

Call or text: (210) 512-9888

sales@RubberMulchOutlet.com

	ITEM	ITEM NAME	SPECIFICATION	QTY	PIC
POD BRIDGE	POD BRIDGE			1	
	1	BOLT	M10x25	6	
	2	WASHER	M10	12	
	3	LOCK NUT	M10	6	
	4	BOLT	M8x30	2	
	5	LOCK NUT	M8	2	
REMARK		梅花桩云梯与立柱连接			

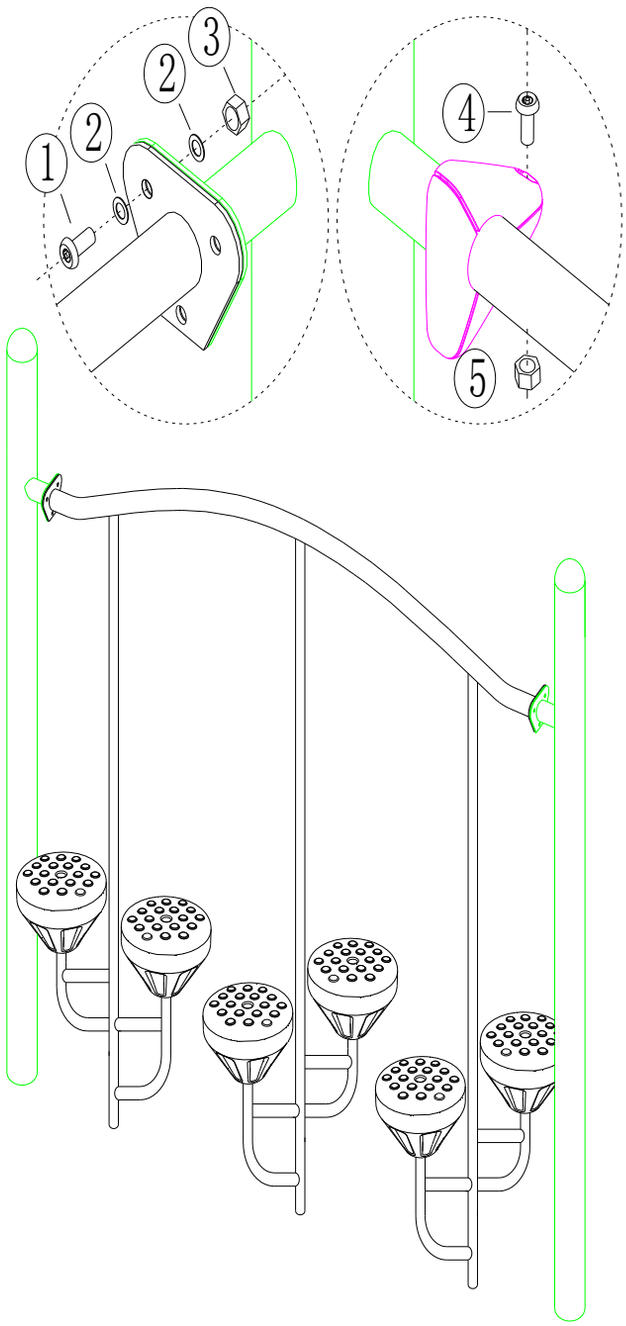

	ITEM	ITEM NAME	SPECIFICATION	QTY	PIC
RINGS OVERHEAD LADDER	RINGS OVERHEAD LADDER			1	
	1	BOLT	M10x25	6	
	2	WASHER	M10	12	
	3	LOCK NUT	M10	6	
	4	BOLT	M8x30	2	
	5	LOCK NUT	M8	2	
REMARK		RINGS OVERHEAD LADDER CONNECT WITH POST			

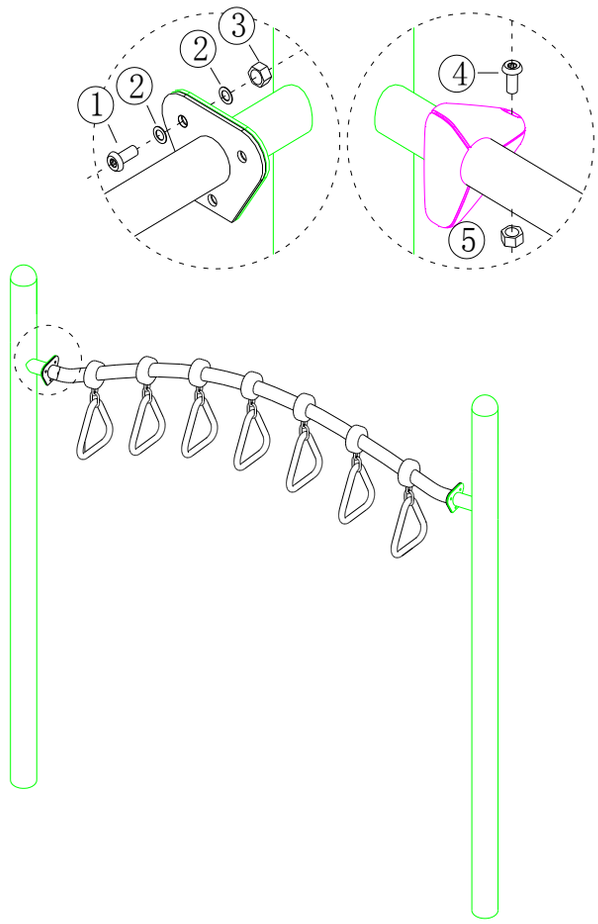

	ITEM	ITEM NAME	SPECIFICATION	QTY	PIC
PULL UP BAR	PULL UP BAR			1	
	1	BOLT	M10x25	6	
	2	WASHER	M10	12	
	3	LOCK NUT	M10	6	
	4	BOLT	M8x30	2	
	5	LOCK NUT	M8	2	
REMARK		PULL UP BAR CONNECT WITH POST			

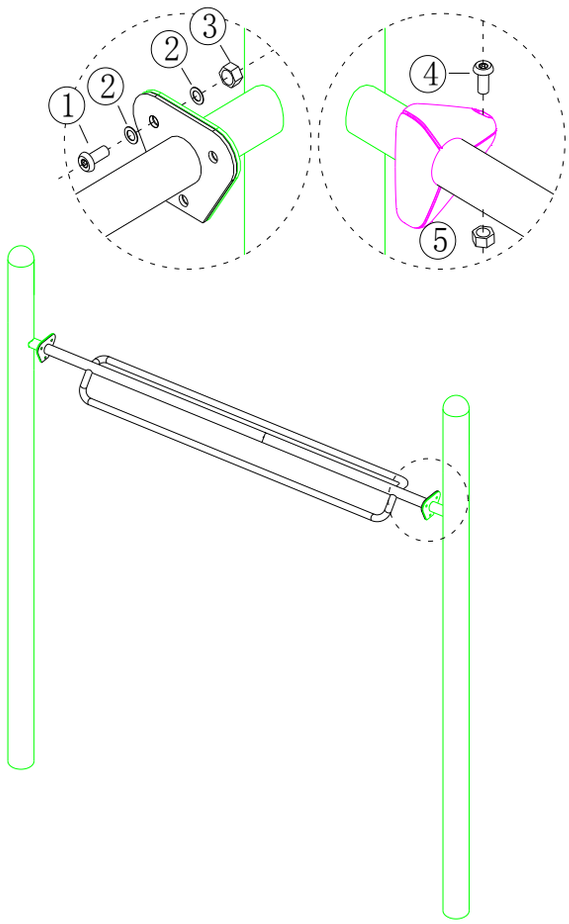

	ITEM	ITEM NAME	SPECIFICATION	QTY	PIC
CONNECT BAR	CONNECT BAR			1	
	1	BOLT	M10x25	6	
	2	WASHER	M10	12	
	3	LOCK NUT	M10	6	
	4	BOLT	M8x30	2	
	5	LOCK NUT	M8	2	
REMARK		CONNECT BAR CONNECT WITH POST			

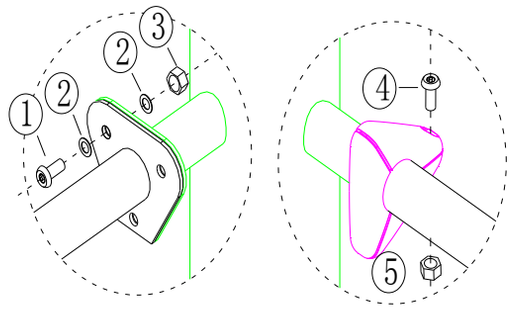

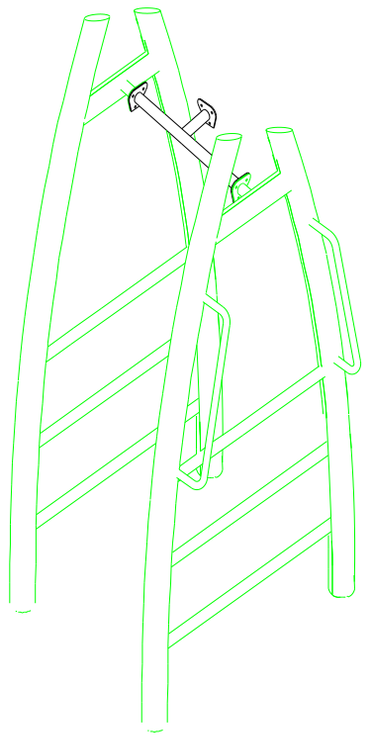

	ITEM	ITEM NAME	SPECIFICATION	QTY	PIC
SLIDE	SLIDE			1	
	1	BOLT	M10*20	2	
	2	WASHER	M10	2	
	3	SPRING WASHER	M10	2	
REMARK	SLIDE CONNECTION				

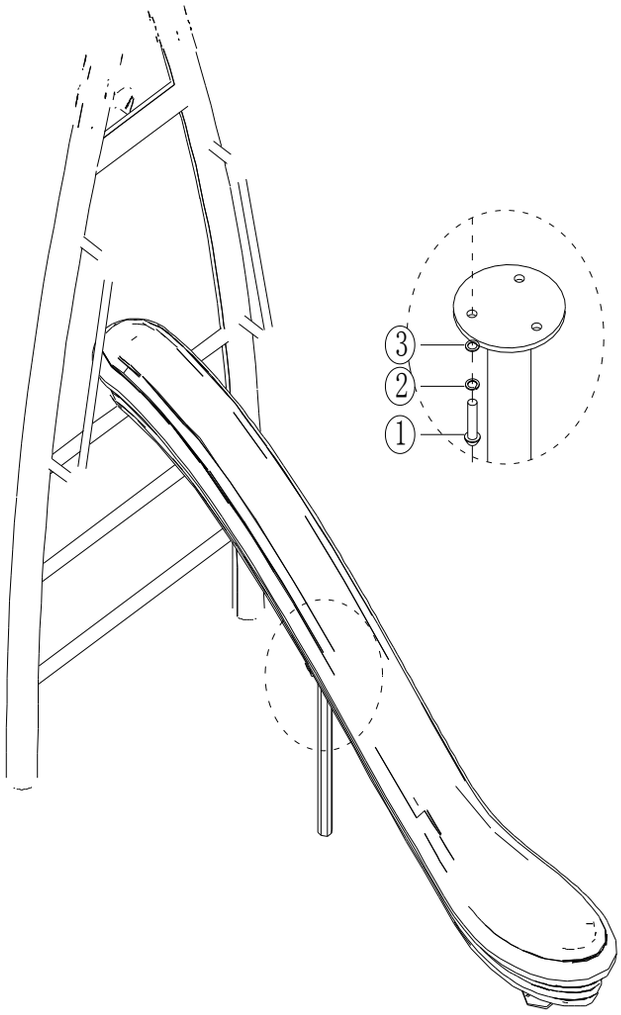

	ITEM	ITEM NAME	SPECIFICATION	QTY	PIC
SLIDE	SLIDE			1	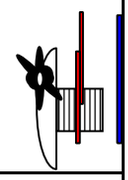
	1	BOLT	M10*20	2	
	2	WASHER	M10	2	
	3	SPRING WASHER	M10	2	
REMARK	SLIDE CONNECTION				

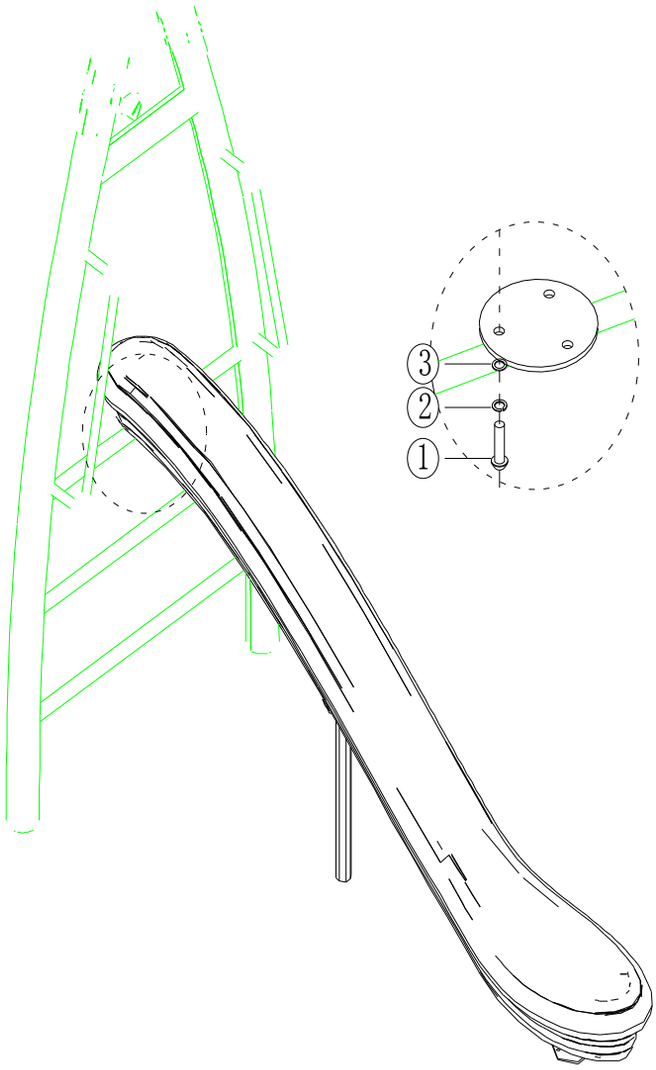

	ITEM	ITEM NAME	SPECIFICATION	QTY	PIC
SLIDE	SLIDE			1	
	1	BOLT	M10*20	2	
	2	WASHER	M10	2	
	3	SPRING WASHER	M10	2	
REMARK	SLIDE CONNECTION				

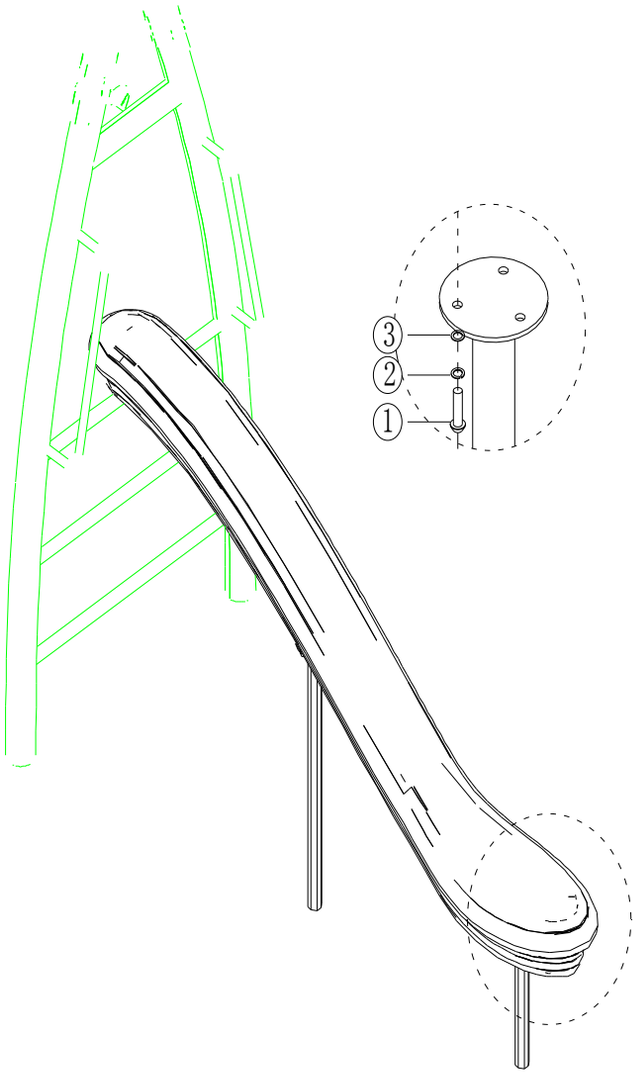

	ITEM	ITEM NAME	SPECIFICATION	QTY	PIC
CLIMBER	CLIMBER			1	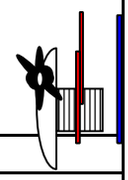
	1	BOLT	M10x50	6	
	2	WASHER	M10	12	
	3	LOCK NUT	M10	6	
REMARK		CLIMBER CONNECTION			

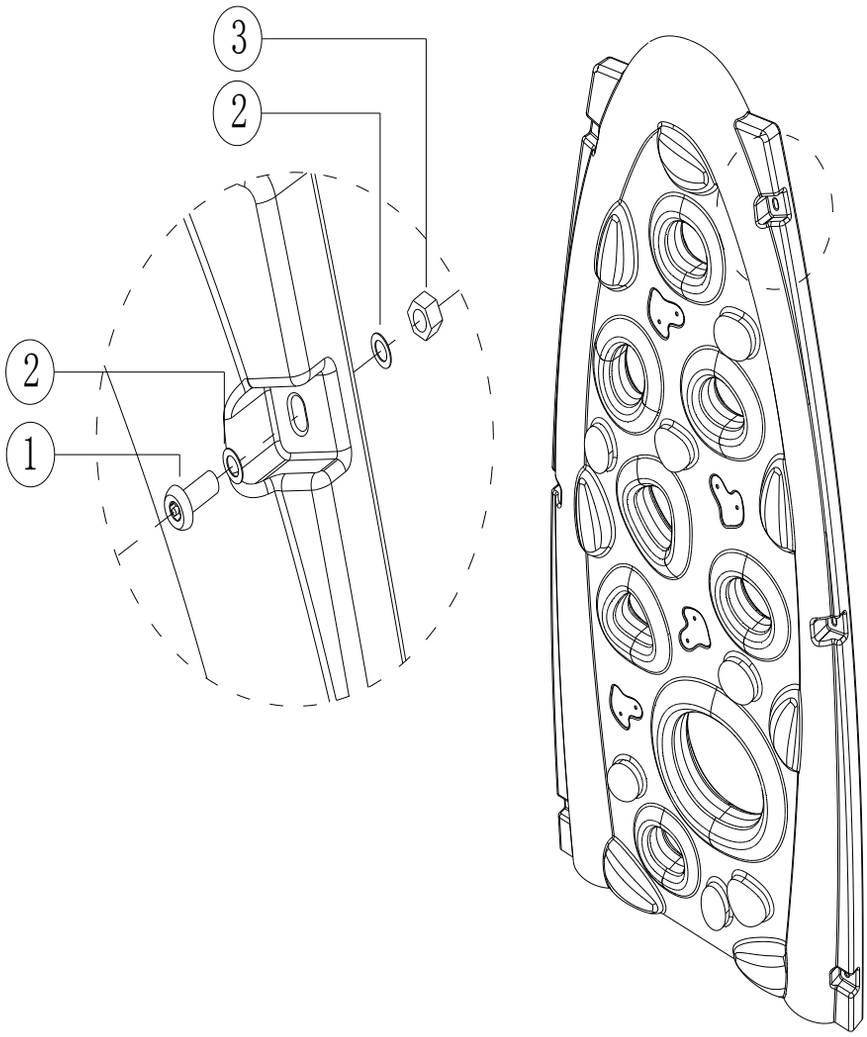

	ITEM	ITEM NAME	SPECIFICATION	QTY	PIC
ELLIPSE CLIMBER	ELLIPSE CLIMBER			1	
	1	BOLT	M10x25	6	
	2	WASHER	M10	12	
	3	LOCK NUT	M10	6	
	4	BOLT	M8x30	2	
	5	LOCK NUT	M8	2	
REMARK		ELLIPSE CLIMBER CONNECT WITH POST			

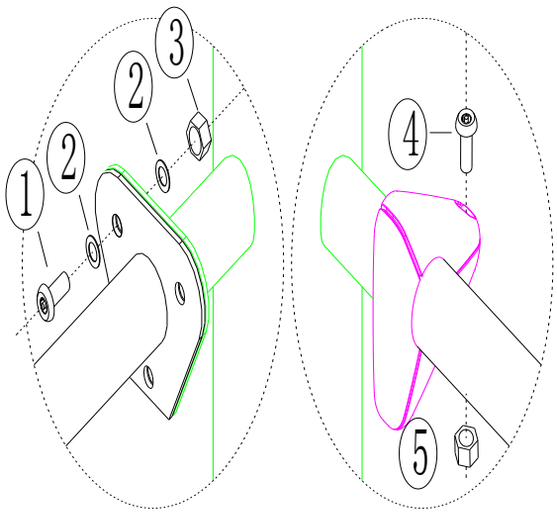

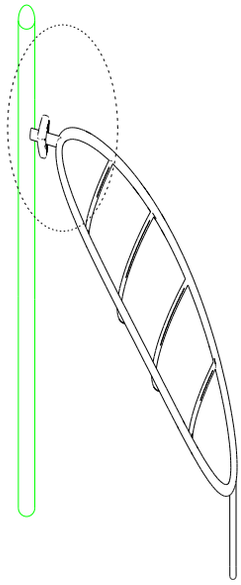
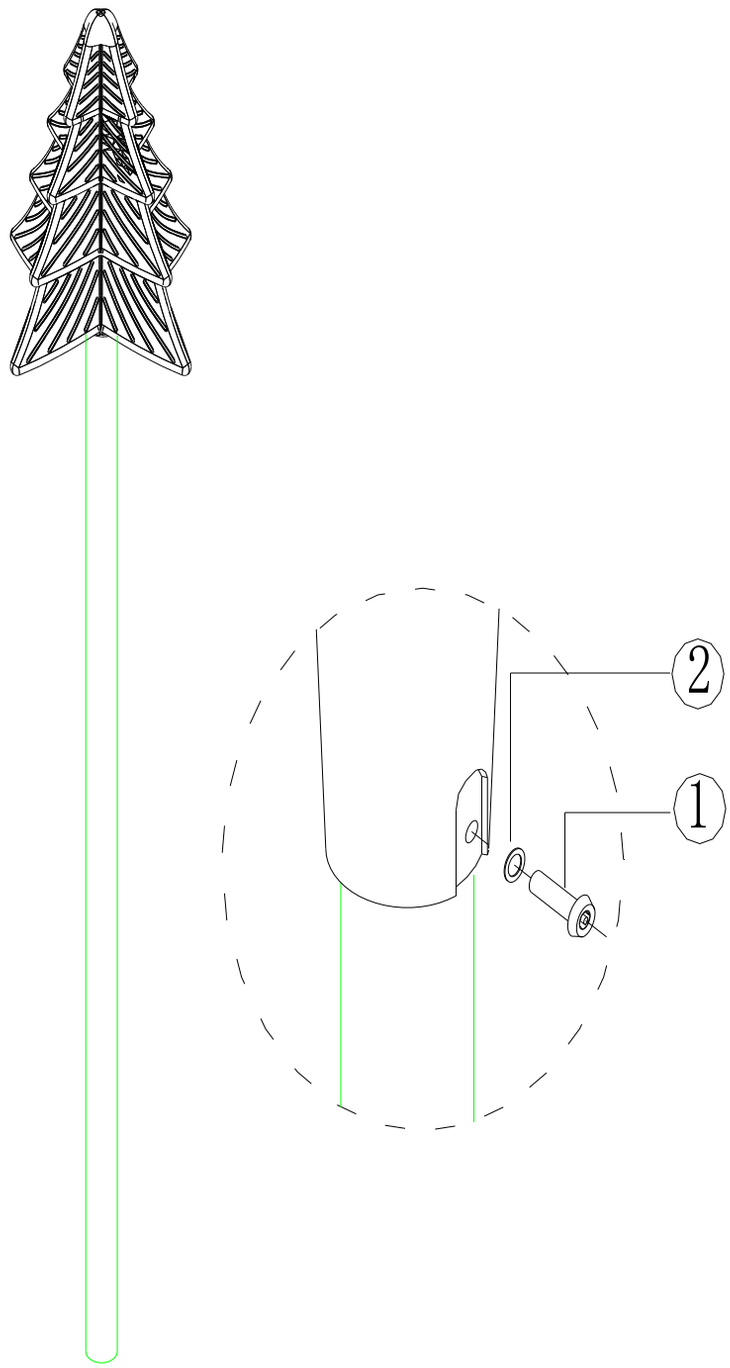
PINE TREE TOPPER	ITEM	ITEM NAME	SPECIFICATION	QTY	PIC
	PINE TREE TOPPER			1	
	1	BOLT	M8*45	3	
	2	WASHER	M8	3	
REMARK	PINE TREE TOPPER CONNECT WITH POST