RubberMulchOutlet.com
COMMERCIAL PLAYGROUNDS
SURFACING • SITE SOLUTIONS

COMPONENT GUIDE

INSTALLATION INSTRUCTIONS

SLF-EMR46-H60L Assembly Instructions

Component / Configuration Reference

MODEL NUMBER	GUIDE LEVEL	DOCUMENT STATUS
SLF-EMR46-H60L-BL-GG	Component / Configuration	Customer Reference Copy

Helpful Installation Note

This guide is provided for information and planning purposes. Product designs and installation requirements may change over time. Before beginning installation, please review the instructions included with your product and confirm that you are using the most current product-specific instructions. If there is any difference, follow the current instructions supplied with the product.

Need help confirming the correct guide? Contact Rubber Mulch Outlet.

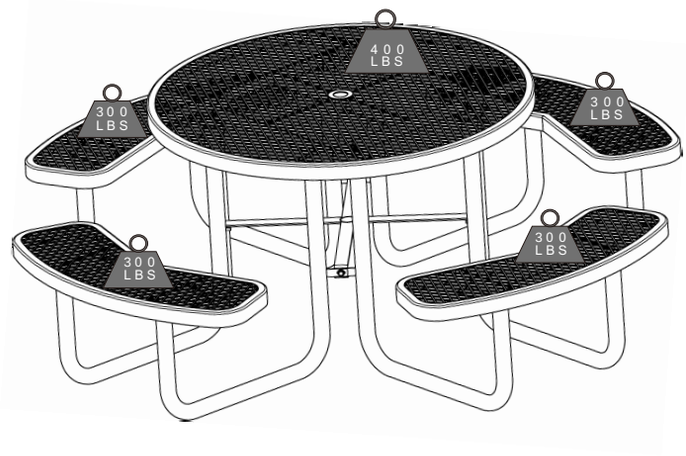

46" Round Commercial Outdoor Expanded Metal Steel Picnic Table

ASSEMBLY INSTRUCTIONS

Before You Begin:

Please identify all component parts and hardware pieces required before you begin. Carefully remove all of the components from the packaging and set aside for assembly. Assemble on a soft surface to prevent scratching during assembly.

Caution:

Tighten all components securely before use. Failure to do so may result in personal injury.
DO NOT use any sharp objects to open plastic wrapped components as damage to product or componenets may result.

Warning:

CHOKING HAZARD - Small Parts. Adult Assembly Required.

Injury may result from tipping furniture. You must install the Tipping Restraint Hardware with the unit to prevent the unit from tipping and causing any accidental injury, instability, death or damage. The tipping restraint is intended only as a safety measure, it is not a substitute for proper adult supervision.

This tipping restraint is not an earthquake restraint. If you wish to add the extra security of earthquake restraints, they must be purchased and installed separately.

Serious or fatal crushing injuries can occur from furniture tipping over. To prevent furniture from tipping over it must be permanently fixed to the wall. Fixing devices for the wall are not included since different wall materials require different types of fixing devices. Use fixing devices suitable for the walls in your home.

Failure to detach this restraint before moving furniture may result in injury or damage.

DO NOT ALLOW CHILDREN TO CLIMB ON FURNITURE

PARTS

A: Table Top 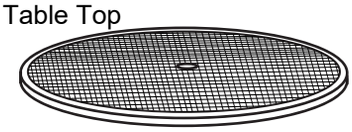	**B:** Seat 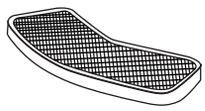	**C:** Right Leg 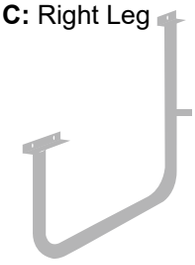	**D:** Left Leg 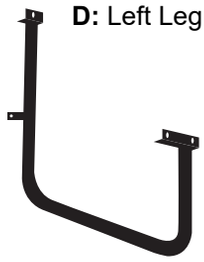	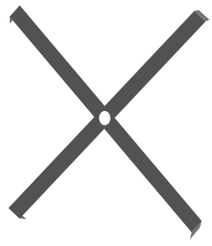
1pc	4pcs	4pcs	4pcs	X-Link 1pc
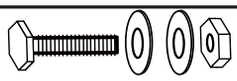 **28 SETS** Dia. 5/16″x L. 1 3/16″Hex Cap Screw and 5/16″ Hex Nut				

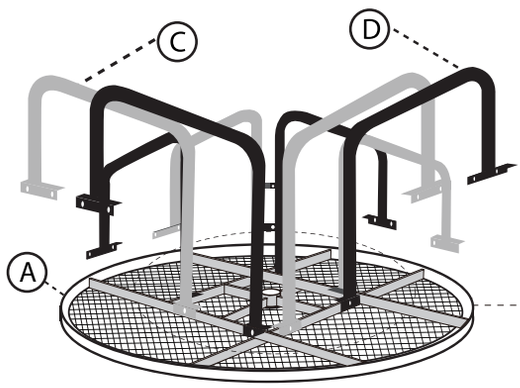

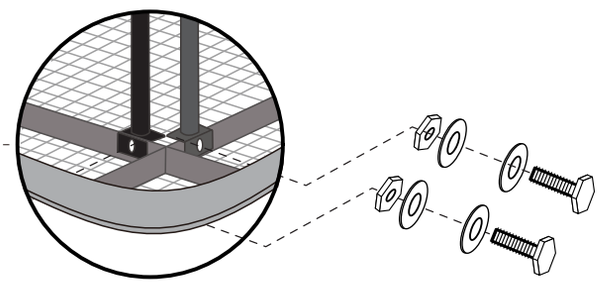

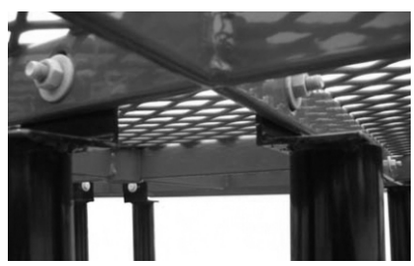

Step 1
Assembly of the Legs and table top

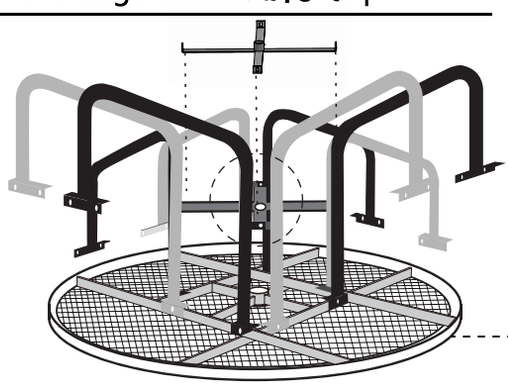



Step 2
Assembly of the X-Link onto the 4 Legs

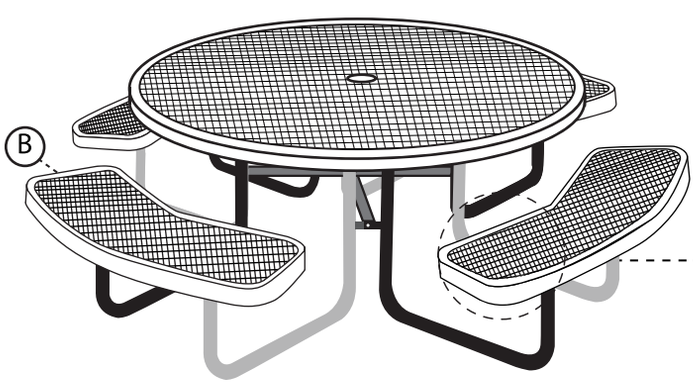



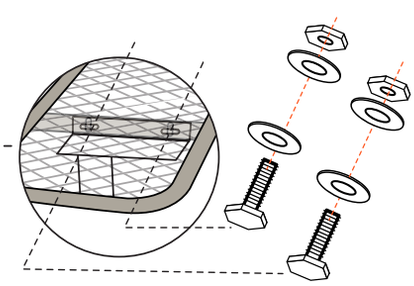

Step 3
Assembly of the Legs and Seats

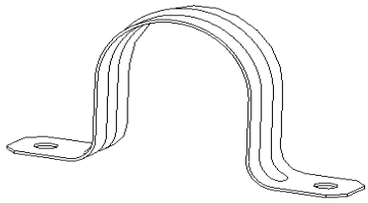

Ground Anchors for 46" Round & Square Tables, Includes 8 Screws, 4 Brackets and 1 Drill Bit for Concrete

ASSEMBLY INSTRUCTIONS

Before You Begin: A power drill and 8mm socket required for installation (Not Included).

Please identify all component parts and hardware pieces required before you begin. Carefully remove all of the components from the packaging and set aside for assembly. Assemble on a soft surface to prevent scratching during assembly.

Caution:

Tighten all components securely before use. Failure to do so may result in personal injury.
DO NOT use any sharp objects to open plastic wrapped components as damage to product or components may result.

Warning:

CHOKING HAZARD - Small Parts. Adult Assembly Required.

Injury may result from tipping furniture. You must install the Tipping Restraint Hardware with the unit to prevent the unit from tipping and causing any accidental injury, instability, death or damage. The tipping restraint is intended only as a safety measure, it is not a substitute for proper adult supervision.

This tipping restraint is not an earthquake restraint. If you wish to add the extra security of earthquake restraints, they must be purchased and installed separately.

Serious or fatal crushing injuries can occur from furniture tipping over. To prevent furniture from tipping over it must be permanently fixed to the wall. Fixing devices for the wall are not included since different wall materials require different types of fixing devices. Use fixing devices suitable for the walls in your home.

Failure to detach this restraint before moving furniture may result in injury or damage.

DO NOT ALLOW CHILDREN TO CLIMB ON FURNITURE

Steps

1. **Using provided drill bit,drill hole into the concrete, block or stone to a depth of 2 -1/2".**
2. **Blow out the dust in the hole.**
3. **Place bracket over leg tubing.**
4. **Secure screw flush with bracket into drilled hole.**
5. **Repeat for remaining screws.**

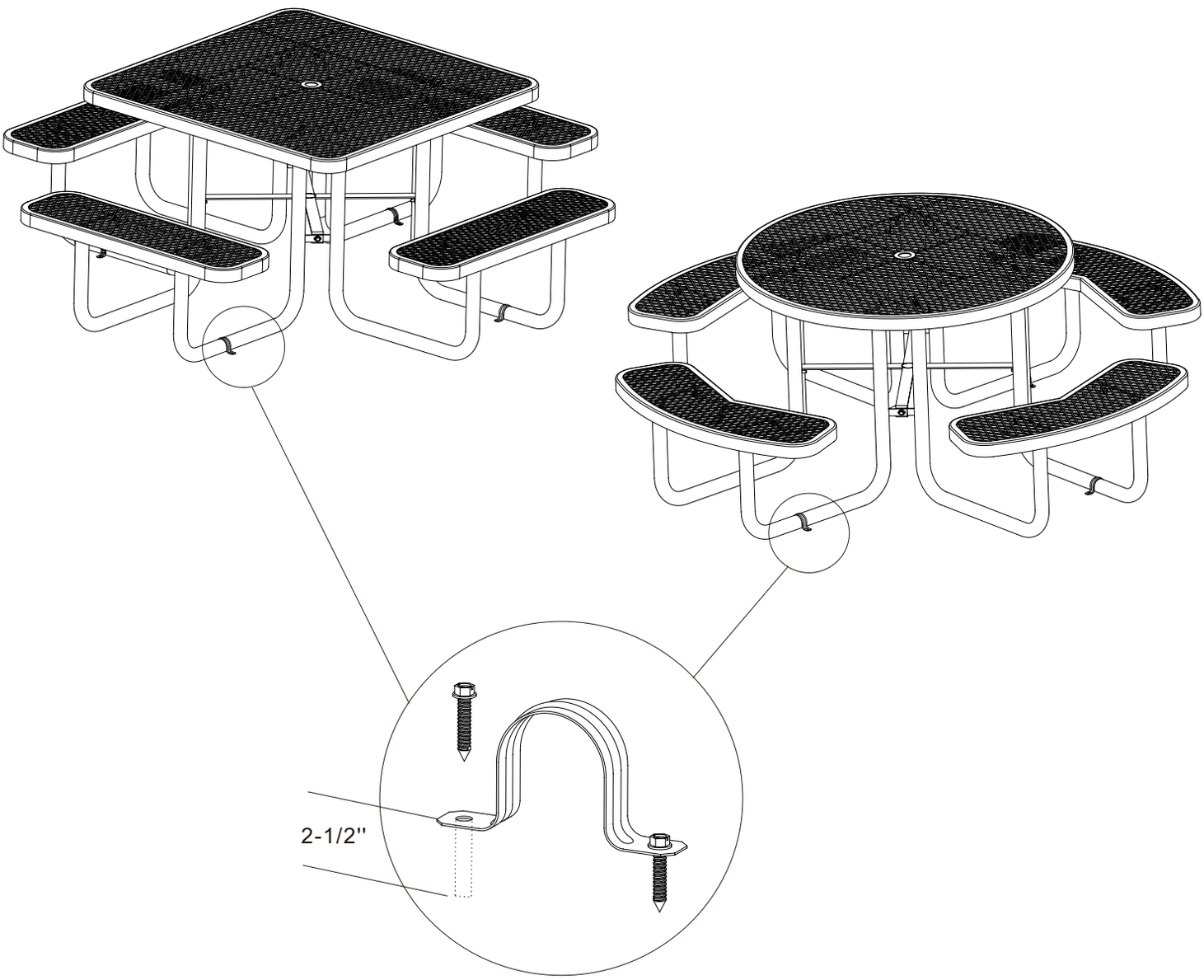

TABLES & BENCHES PURCHASED SEPARATELY NOT INCLUDED.