RubberMulchOutlet.com
COMMERCIAL PLAYGROUNDS
SURFACING • SITE SOLUTIONS

COMPONENT GUIDE

INSTALLATION INSTRUCTIONS

Pier Mount Anchor Instructions

Component / Configuration Reference

MODEL NUMBER	GUIDE LEVEL	DOCUMENT STATUS
PV672DX;PV672DXFH	Component / Configuration	Customer Reference Copy

Helpful Installation Note

This guide is provided for information and planning purposes. Product designs and installation requirements may change over time. Before beginning installation, please review the instructions included with your product and confirm that you are using the most current product-specific instructions. If there is any difference, follow the current instructions supplied with the product.

Need help confirming the correct guide? Contact Rubber Mulch Outlet.

Call or text: (210) 512-9888

sales@RubberMulchOutlet.com

ADJUSTABLE HEIGHT GOAL SYSTEMS

Anchor Installation Manual

THANK YOU!

Thank you and congratulations for purchasing a Proformance Hoops Goal - the finest basketball goal system on the market today! You will discover that Proformance Hoops is unsurpassed in product innovation, quality and integrity in the basketball equipment industry. We are focused on designing and engineering products that meet and exceed the expectations of demanding players and withstand today's toughest playing environments.

LAY OUT PLAYING COURT

Consider the following to determine where to install the basketball goal:

- **Whether the goal is to be installed into a landscaped area next to the playing surface or into a hard-surfaced area.**
- **Backboard size and its extension distance from the structures.**
- **If court markings are to be used.**
- **Amount of playing surface desired beneath the goal.**
- **Other functions of playing surface (such as driveway, tennis court, etc.)**
- **There must be at least 18" clearance behind the back of the Goal Post to allow room to operate the goal height adjusting crank.**
- **When the rim is set to the regulation height of 10 ft. the distance from the face of the backboard to the front of the Goal Post is, depending upon the PROforce (PF) or PROview (PV) model, shown in the figure below.**

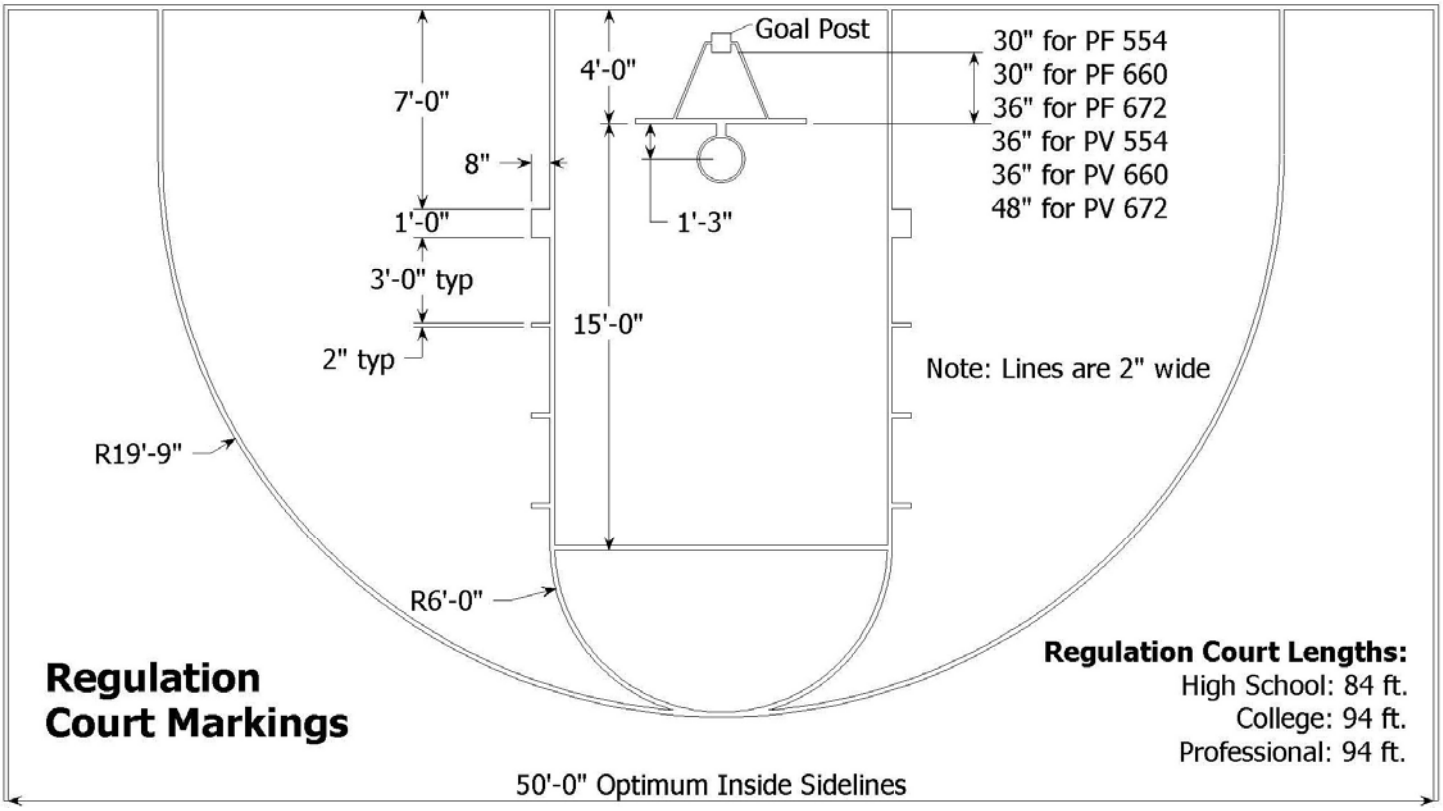

SAFETY INSTRUCTIONS

Failure to follow these safety instructions may result in serious injury or death and/or property damage.

- Do not install or use this product unless the instructions within this manual have been carefully read and understood.

- Know what's below ground. "Call before you dig" the hole for the ground anchor. For the US the number is 811.
- If using a ladder during assembly, use extreme caution. Two or three people are recommended for safe installation and assembly.
- Installation and assembly of this product will require lifting and bending that may result in injury to anyone not accustomed to this type of activity.
- Ensure there are no overhead power lines within a 20 ft. (7m) radius of the goal location.
- Climate, corrosion or misuse could result in system failure.
- DO NOT HANG on the rim or any part of the goal system. This includes the backboard, support braces and net.
- During play, especially when performing dunking activities, players should keep their faces away from the backboard, rim and net. Serious injury could result if teeth or face come in contact with the backboard, rim or net. Do not wear jewelry or other loose objects that could become entangled with the net.
- Twice yearly, check the goal system for loose hardware, excessive wear and signs of corrosion. Repair the system before use.
- Never play on damaged equipment.

WARNING

FAILURE TO FOLLOW THESE WARNINGS MAY RESULT IN SERIOUS INJURY AND/OR PROPERTY DAMAGE.

Owner must ensure that all players know and follow these rules for safe operation of the system.

- DO NOT REMOVE OR COVER THIS WARNING LABEL
- DO NOT HANG on the rim or any part of system including backboard, support braces or net.
- During play, especially when performing dunk type activities, keep player's face away from the backboard, rim and net. Serious injury could occur if teeth/face come in contact with backboard, rim or net.
- Do not slide, climb or play on pole.
- Do not allow young children to adjust system.
- During play, do not wear jewelry (rings, watches, necklaces, etc.). Objects may entangle in net.
- Keep organic material away from pole base. Grass, litter, etc. could cause corrosion and/or deterioration.
- Check pole system for signs of corrosion (rust, pitting, chipping) and repaint with exterior enamel paint. If rust has penetrated through the steel anywhere, replace pole immediately.
- Check system before each use for loose hardware, excessive wear and signs of corrosion and repair before use.
- Never play on damaged equipment.

SAFETY INSTRUCTIONS

FAILURE TO FOLLOW THESE SAFETY INSTRUCTIONS MAY RESULT IN SERIOUS INJURY AND/OR PROPERTY DAMAGE

- If using a ladder during assembly, use extreme caution. 2-3 people are recommended for safe installation and assembly.
- Before digging, contact utility company to locate underground power cables, gas and water lines.
- Ensure there are no overhead power lines within 20 ft. (7m) radius of pole location.
- Climate, corrosion or misuse could result in system failure.
- If technical assistance is required, contact the manufacturer.
- The Safety Rod stops the Main Extension Arm at a 7 ft. rim height. Attempting to adjust further down will damage the Arm.
- With the Safety Rod removed, adjustment of the rim below a height of 6'-0" (1.83m) will cause internal damage to the mechanism.
- Installation and assembly will require lifting and bending that may result in injury to persons not accustomed to this type of activity.

Most injuries are caused by misuse and/or not following instructions. Exercise caution when using this system.

GROUND ANCHOR INSTALLATION

Contacting buried utilities may cause serious injury or death. Before you start digging always contact your local One-Call system to help prevent personal injury, interruption of services, environmental accidents or job delays.

Electric lines can shock or electrocute. Gas lines can rupture causing explosion or fire. Laser light in fiber optic cable can cause blindness.

One-Call will notify participating utility companies of your proposed digging project. **If you do not know the number for the local One-Call in your area, call the National One-Call at 1-800-258-0808 for this information.** After being notified, utility companies will mark their underground facilities by using the following international marking codes:

Color	Definition
Red	Electric
Yellow	Gas, Oil or Petroleum
Orange	Communication, Telephone, TV
Blue	Potable Water
Green/Brown	Sewer
White	Proposed Excavation
Pink	Surveying

Required Tools and Materials:

*Spade *Level
*Shovel *Stir Rod
*Tape Measure *Water
*Auger or Post-Hole Digger
*(10 to 14) 60 lb. Bags of Dry Concrete Mix
*(Or 1/4 - 1/3 yard of ready mix concrete)

GROUND ANCHOR PLACEMENT

Choose the proper location to dig for the concrete footing. (Refer to page 2)

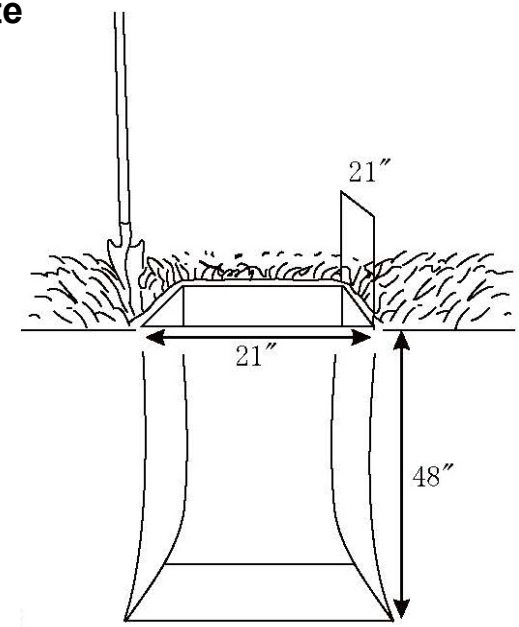

STEP A

1. **Centered in the desired location, dig a hole 48" deep and 21"x 21" square. The edge of the hole should be flush with the edge of the playing surface. If you live in an area where heavy frost can occur it may pose a problem. Consult your local building inspector to determine the appropriate hole-depth. NOTE: The hole must be at least 48" deep.**
2. **Build a form before pouring the concrete pad to ensure that the top of the concrete remains straight and square. The form should be placed about 1/2" above the playing surface to allow for water drainage.**
3. **Bell out the bottom of the hole.**

NOTE: A square hole prevents the rotation of the concrete.

GROUND ANCHOR INSTALLATION (continued)

STEP B

1. Assemble one Hex Nut onto each of the J-Bolts. Tighten them all the way down to where the threads stop.

2. Insert the threaded end of each J-Bolt into the Mounting Template, point the bent end as shown in the figure, and secure with another Hex Nut.

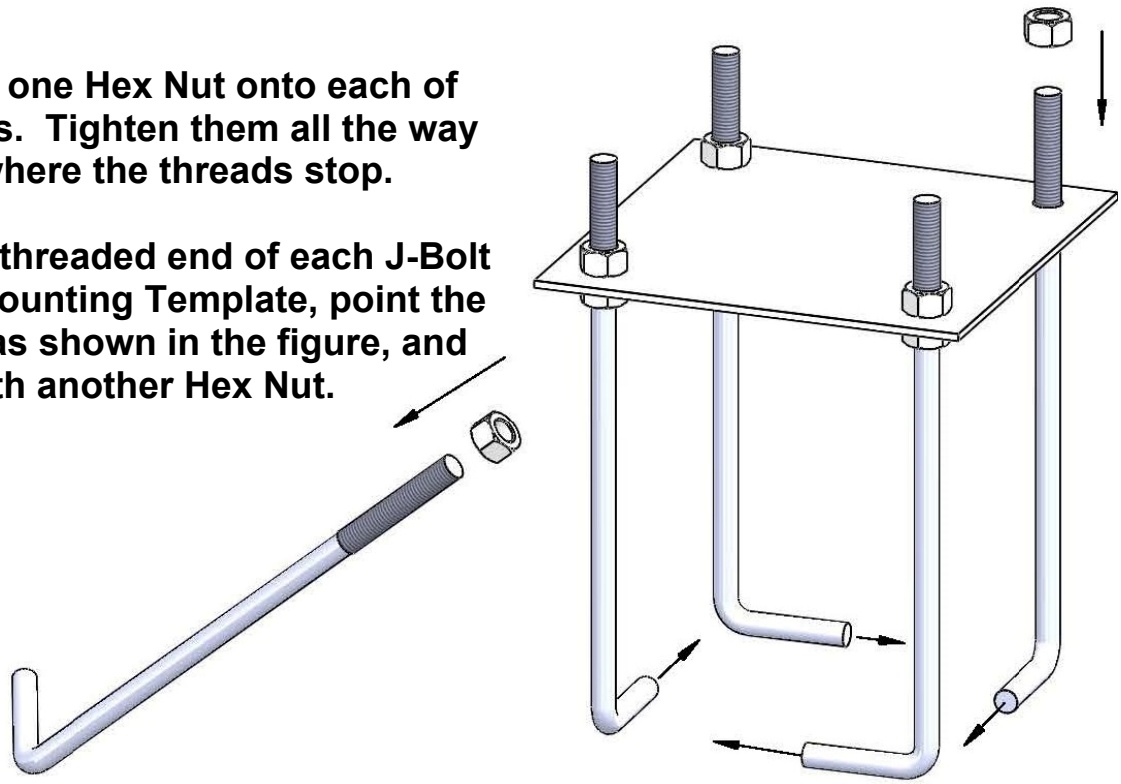

STEP C

1. Mix the concrete according to the instructions on the bags. Note that a thicker mix of concrete will dry stronger than a thin mix. Pour the concrete into the hole, stopping approximately 18 inches from the top of the hole.

2. Insert the four pieces of Anchor Rebar into the hole, pushing each piece firmly to the bottom of the hole. The four pieces should be arranged in a square approximately 8 inches wide so that each piece of rebar will be positioned next to the J-Bolts when the J-Bolt Template is placed in the cement.

3. Finish filling the hole to the top with concrete. The top of the concrete should reach just above the level of the top of the form.

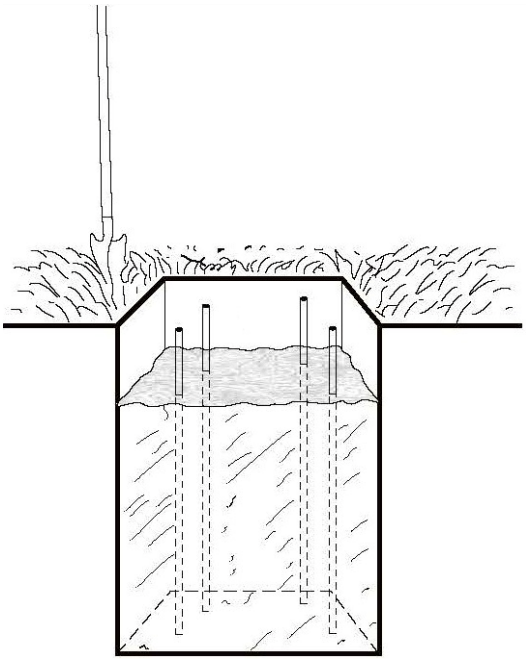

GROUND ANCHOR INSTALLATION (continued)

STEP D

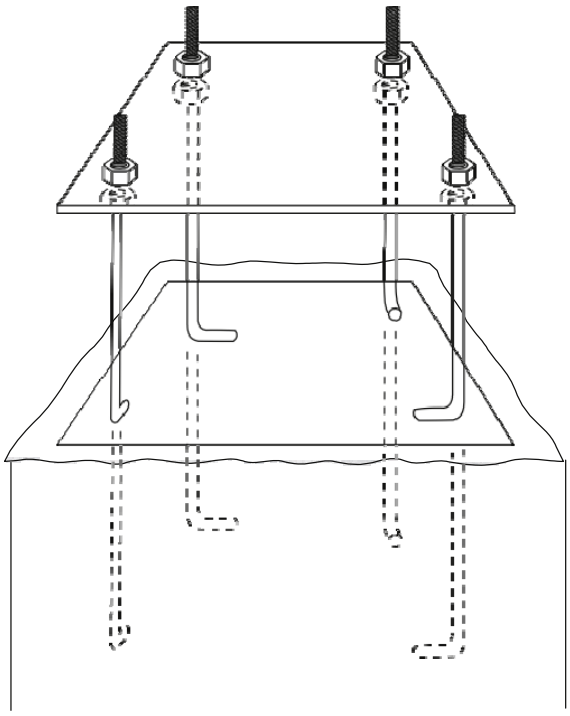

1. **Position the J-Bolt Template over the hole so that it is centered with the sides of the plate and square with the sides of the hole.**
2. **Push the J-Bolts (U2) into the concrete until the J-Bolt Template is resting flat against the surface of the concrete.**
3. **Grasp the tops of the J-Bolts and agitate the Template assembly back and forth repeatedly to eliminate any air bubbles in the concrete. Lift the Template slightly above the concrete when agitating. Make sure the Template is resting on the concrete after agitating. Form the concrete into a downward slope away from the Pole to allow water runoff.**
4. **Clean off any concrete that may be on the J-Bolt Template or the exposed portions of the J-Bolts.**
5. **Using a carpenter's level, make sure the Template is square to and level with the playing surface.**
6. **Allow the concrete to cure for a minimum of 72 hours before installing the rest of your basketball system. In cold, wet weather or humid climates, allow additional time for the concrete to cure.**

YOU ARE NOW FINISHED WITH THE INITIAL ASSEMBLY STEPS. DO NOT PROCEED WITH THE ASSEMBLY UNTIL THE CONCRETE HAS FULLY CURED. CURING WILL TAKE A MINIMUM OF 72 HOURS. IN HUMID CLIMATES OR WET WEATHER ALLOW ADDITIONAL TIME FOR THE CONCRETE TO CURE.

Δ WARNING Δ

NEVER USE THE SYSTEM WITHOUT FOLLOWING THE CEMENTING INSTRUCTIONS. FAILURE TO FOLLOW ALL OF THESE INSTRUCTIONS AND WARNINGS COULD LEAD TO SERIOUS PERSONAL INJURY OR PROPERTY DAMAGE AS LISTED ON PAGE ONE.