RubberMulchOutlet.com
COMMERCIAL PLAYGROUNDS
SURFACING • SITE SOLUTIONS

PLANNING / SUPPORT

INSTALLATION INSTRUCTIONS

PFS041 - Footer Guide

Planning / Support Reference

MODEL NUMBER	GUIDE LEVEL	DOCUMENT STATUS
PFS041	Planning / Support	Customer Reference Copy

Helpful Installation Note

This guide is provided for information and planning purposes. Product designs and installation requirements may change over time. Before beginning installation, please review the instructions included with your product and confirm that you are using the most current product-specific instructions. If there is any difference, follow the current instructions supplied with the product.

Need help confirming the correct guide? Contact Rubber Mulch Outlet.

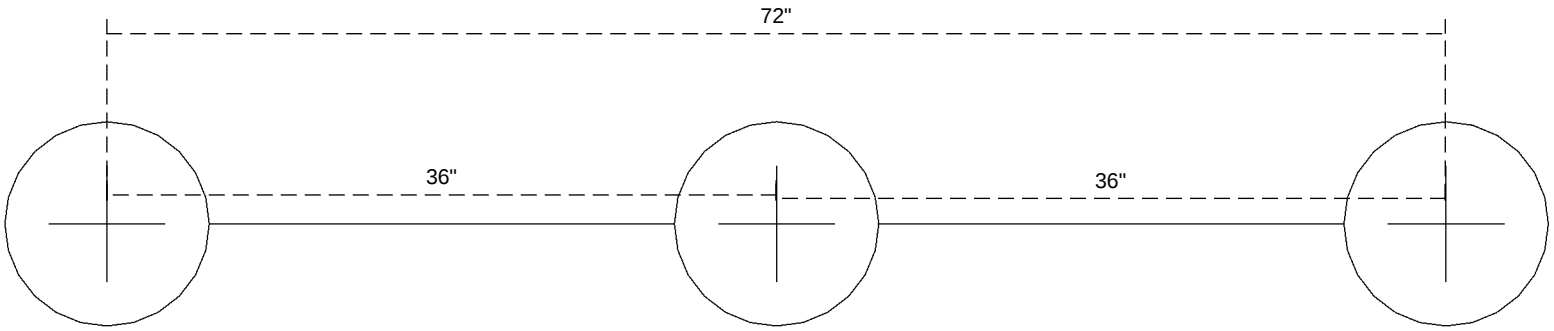

	Footer Layout provided as a guide. Measurements rounded to nearest 1/2 inch. For true accuracy, please measure using equipment onsite. Equipment dimensions are subject to change without notice.	**160226-PE-CR001**
	September 20, 2021	Footer and Post Layout