RubberMulchOutlet.com
COMMERCIAL PLAYGROUNDS
SURFACING • SITE SOLUTIONS

PLANNING / SUPPORT

INSTALLATION INSTRUCTIONS

PFB004 - Use Zone

Planning / Support Reference

MODEL NUMBER	GUIDE LEVEL	DOCUMENT STATUS
PFB004	Planning / Support	Customer Reference Copy

Helpful Installation Note

This guide is provided for information and planning purposes. Product designs and installation requirements may change over time. Before beginning installation, please review the instructions included with your product and confirm that you are using the most current product-specific instructions. If there is any difference, follow the current instructions supplied with the product.

Need help confirming the correct guide? Contact Rubber Mulch Outlet.

Filbert Frog

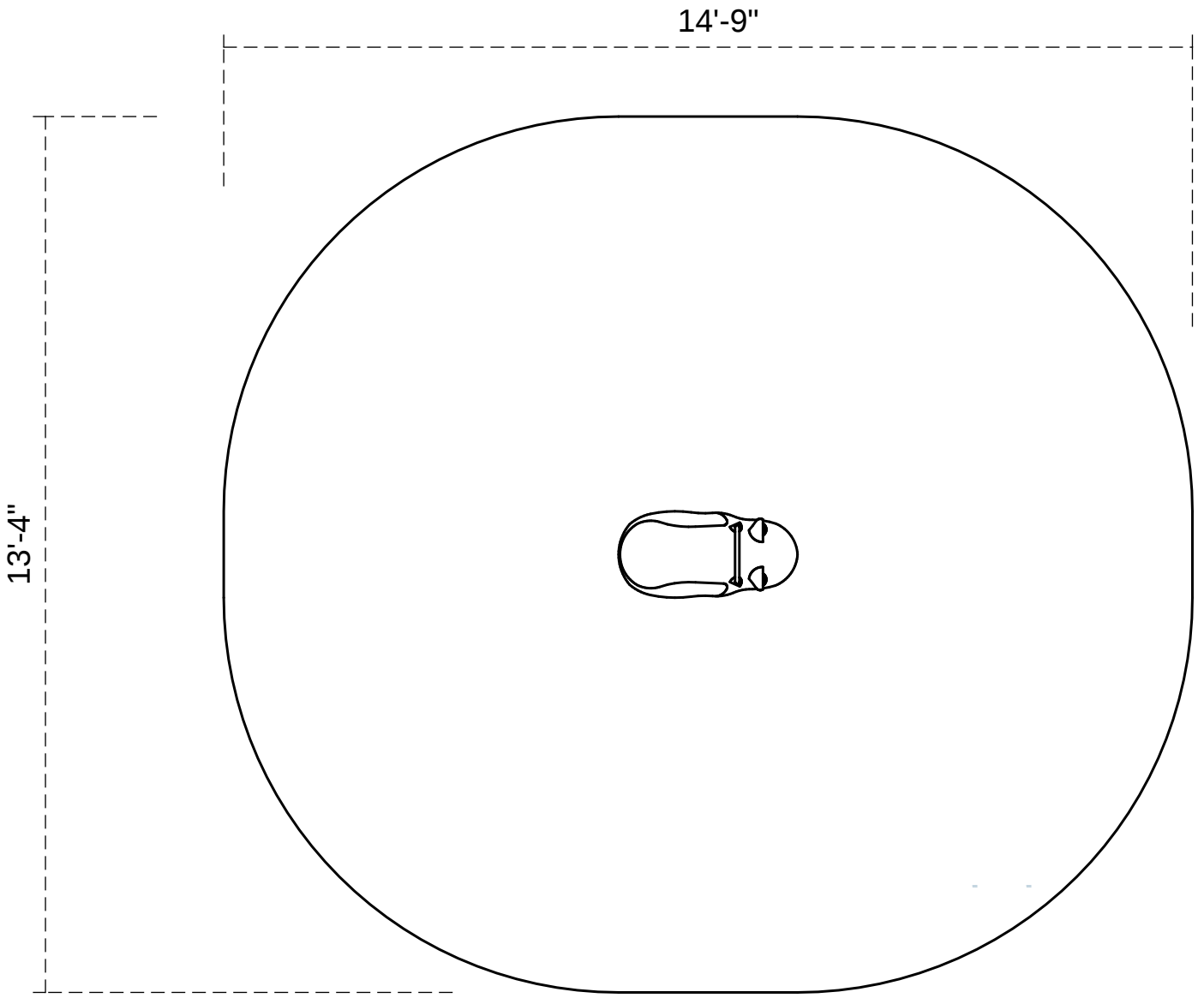

Footprint: 1'-4" x 2'-9"
Use Zone: 13'-4" x 14'-9"

SKU: PFB004

Created On: January 19, 2018

The information provided on this sheet is subject to change without notice.