RubberMulchOutlet.com
COMMERCIAL PLAYGROUNDS
SURFACING • SITE SOLUTIONS

MODEL-SPECIFIC

INSTALLATION INSTRUCTIONS

Installation Manual

Product-Specific Installation Reference

MODEL NUMBER	GUIDE LEVEL	DOCUMENT STATUS
PGC003	Model-Specific	Customer Reference Copy

Helpful Installation Note

This guide is provided for information and planning purposes. Product designs and installation requirements may change over time. Before beginning installation, please review the instructions included with your product and confirm that you are using the most current product-specific instructions. If there is any difference, follow the current instructions supplied with the product.

Need help confirming the correct guide? Contact Rubber Mulch Outlet.

Log Roll Installation

STEP: 1

Connect the tube half of the clamps to the Hand Grip component using one (1) M8*30 bolt each inside the clamp. Then, using the other half of the tube clamps and the hardware provided in the clamp hardware bag, attach the backside of the tube clamp around the post.	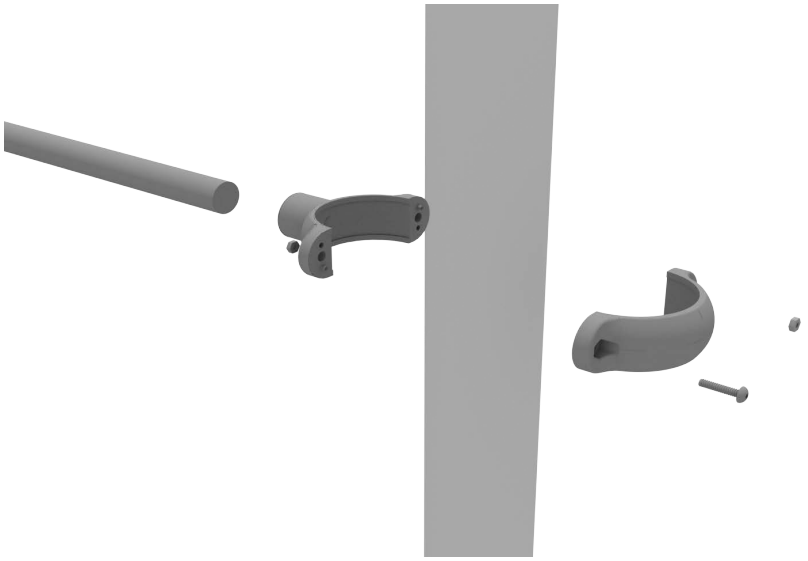

STEP: 2

Connect the tube half of the Log Wheel component using one (1) M8*30 bolt each inside the clamp. Then, using the other half of the tube clamps and the hardware provided in the clamp hardware bag, attach the backside of the tube clamp around the post.	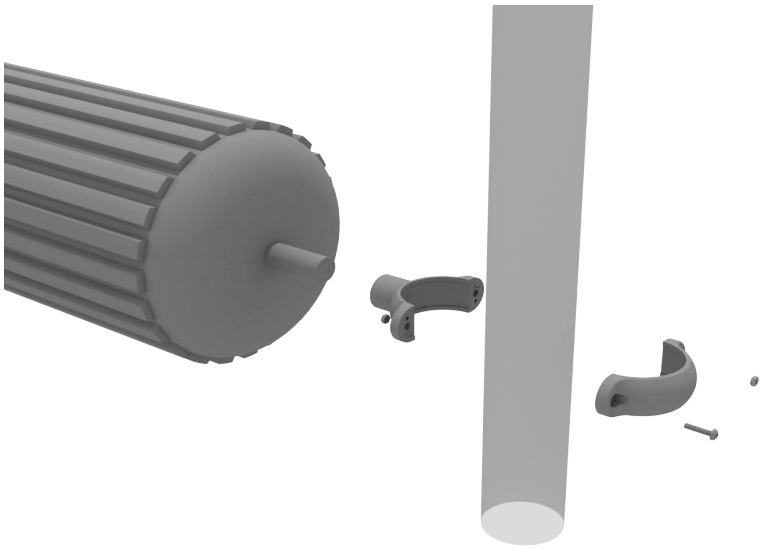

Modified: 06/27/2023