RubberMulchOutlet.com
COMMERCIAL PLAYGROUNDS
SURFACING • SITE SOLUTIONS

MODEL-SPECIFIC

INSTALLATION INSTRUCTIONS

Installation Manual

Product-Specific Installation Reference

MODEL NUMBER	GUIDE LEVEL	DOCUMENT STATUS
PFS020	Model-Specific	Customer Reference Copy

Helpful Installation Note

This guide is provided for information and planning purposes. Product designs and installation requirements may change over time. Before beginning installation, please review the instructions included with your product and confirm that you are using the most current product-specific instructions. If there is any difference, follow the current instructions supplied with the product.

Need help confirming the correct guide? Contact Rubber Mulch Outlet.

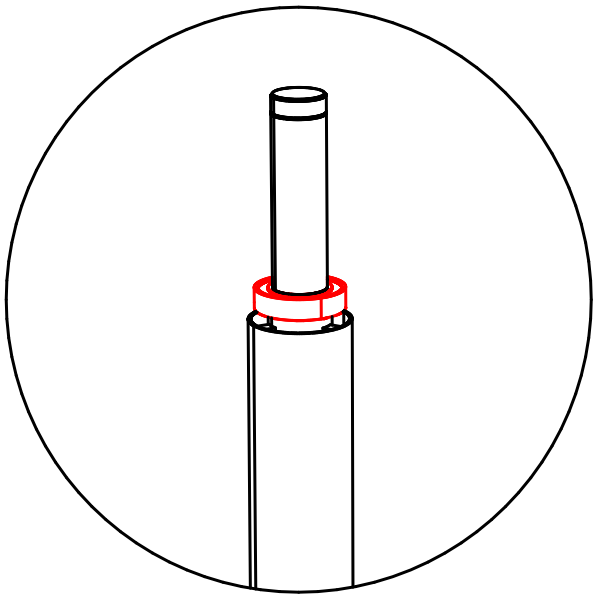

Place the primary bearing assembly over the end of the support post.

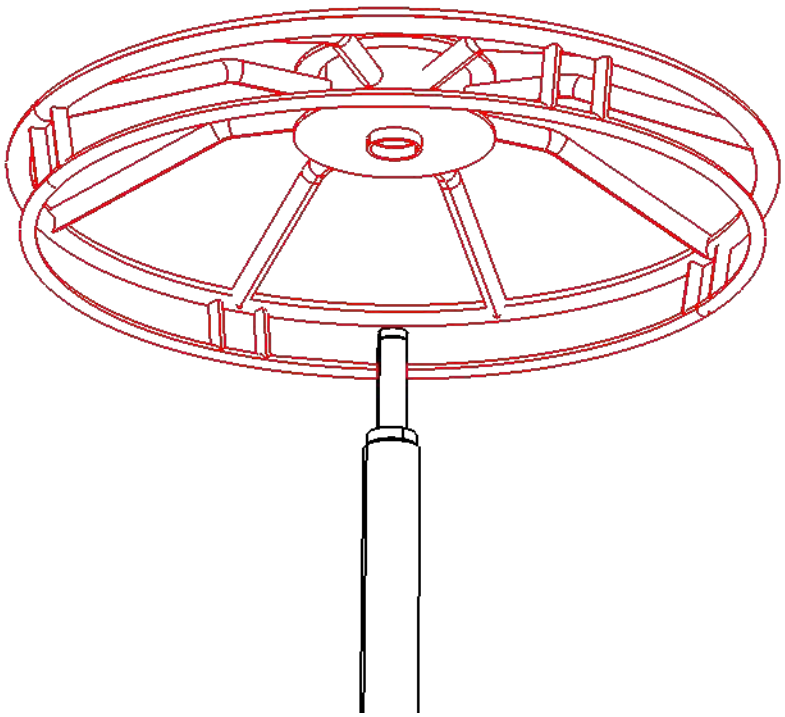

Set the main rotating section onto the support post and primary bearing assembly

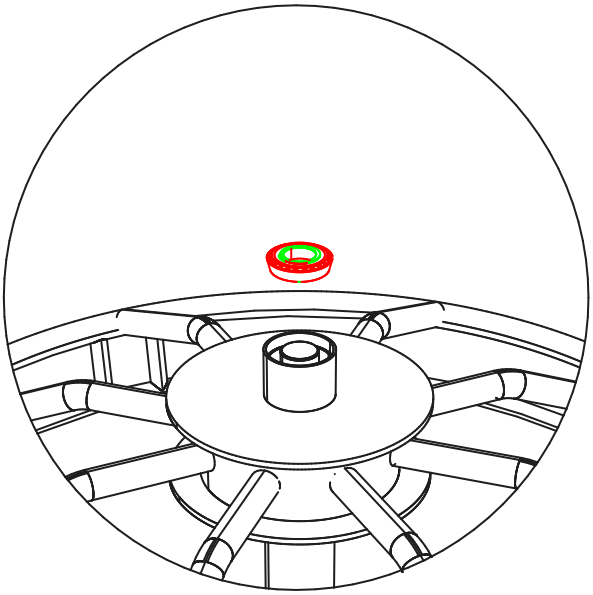

Place the secondary bearing assembly into the slot on top of the support post, then using the provided pliers set the lock ring over the support post and into the locking groove.

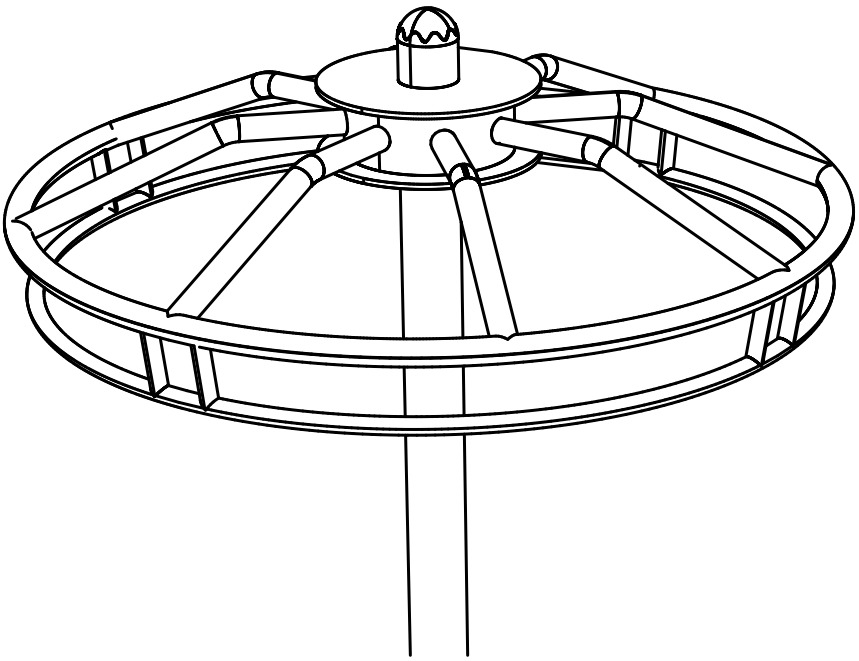

Set the post cap into place on top of the support post, ensuring that it snaps into place.