RubberMulchOutlet.com
COMMERCIAL PLAYGROUNDS
SURFACING • SITE SOLUTIONS

MODEL-SPECIFIC

INSTALLATION INSTRUCTIONS

Installation Manual

Product-Specific Installation Reference

MODEL NUMBER	GUIDE LEVEL	DOCUMENT STATUS
PFS061	Model-Specific	Customer Reference Copy

Helpful Installation Note

This guide is provided for information and planning purposes. Product designs and installation requirements may change over time. Before beginning installation, please review the instructions included with your product and confirm that you are using the most current product-specific instructions. If there is any difference, follow the current instructions supplied with the product.

Need help confirming the correct guide? Contact Rubber Mulch Outlet.

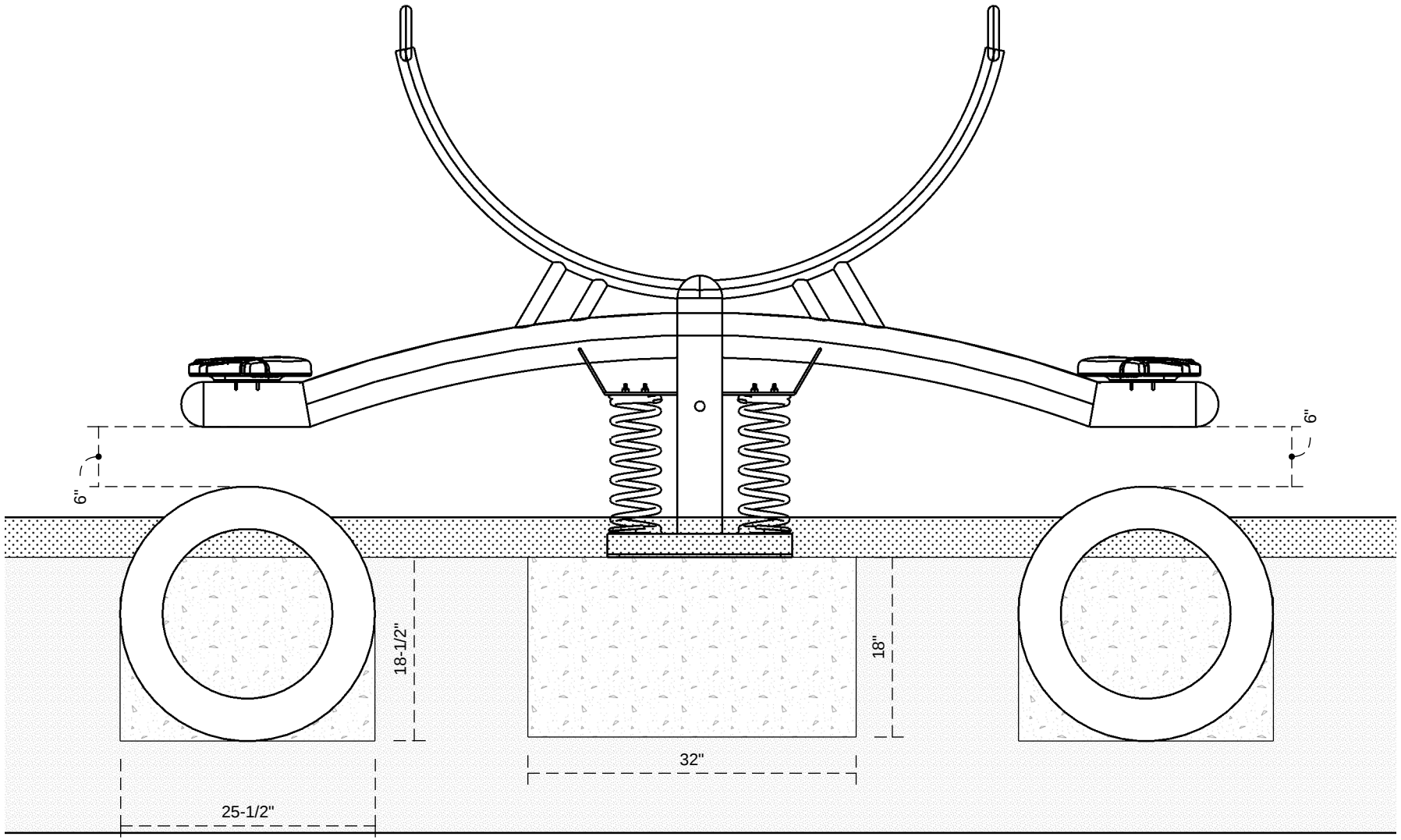

Footer Layout provided as a guide. Measurements rounded to nearest 1/2 inch. For true accuracy, please measure using equipment onsite. Equipment dimensions are subject to change without notice.

PFS061 Flip Flopper

June 30, 2023

Footer and Post Layout

Install Guide

Step 1. Lay out equipment to mark where holes need to be dug. Dig footing and holes for installation of the tires.

Step 2. Pour concrete for the spring mounting location following the mixing instructions provided by the concrete manufacturer. Insert J-bolts into concrete using the spring baseplate as a guide. Support and tie down equipment while concrete is curing.

Step 3. After concrete has cured install the spring baseplate by tightening down the nuts to the J-bolts.

Step 4. Install tires into holes under each end of the flip flopper. Hole depth will depend on tire type/size, but should be installed at a finished height of 6” below the at-rest position of the Flip Flopper. Concrete into place. (the tire size referenced in the footer layout image is 215/50-17).

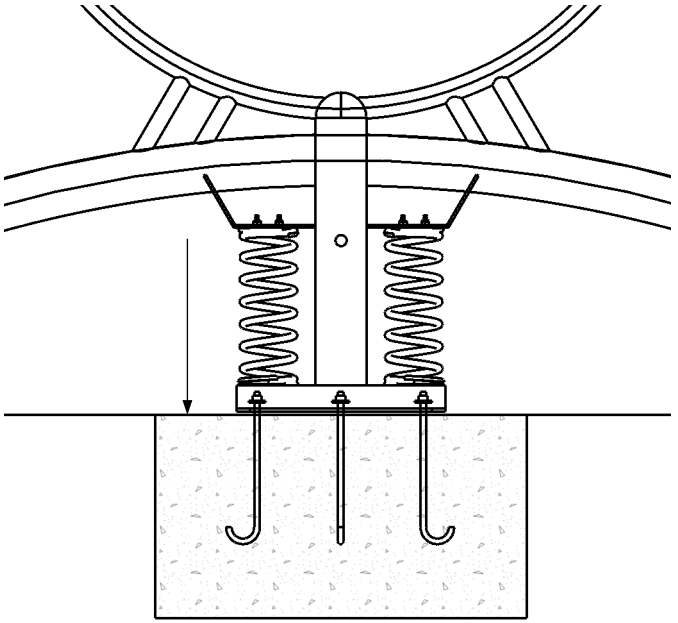

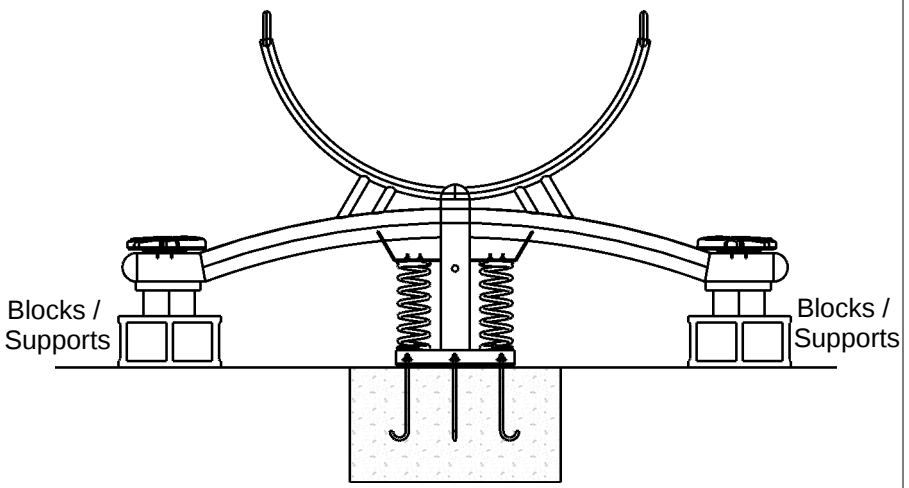

	Footer Layout provided as a guide. Measurements rounded to nearest 1/2 inch. For true accuracy, please measure using equipment onsite. Equipment dimensions are subject to change without notice.	**PFS061 Flip Flopper**
	June 30, 2023	Footer and Post Layout