RubberMulchOutlet.com
COMMERCIAL PLAYGROUNDS
SURFACING • SITE SOLUTIONS

COMPONENT GUIDE

INSTALLATION INSTRUCTIONS

FT1106BP Bolt-Down Post Installation Instructions

Component / Configuration Reference

MODEL NUMBER	GUIDE LEVEL	DOCUMENT STATUS
Multiple models - see master index	Component / Configuration	Customer Reference Copy

Helpful Installation Note

This guide is provided for information and planning purposes. Product designs and installation requirements may change over time. Before beginning installation, please review the instructions included with your product and confirm that you are using the most current product-specific instructions. If there is any difference, follow the current instructions supplied with the product.

Need help confirming the correct guide? Contact Rubber Mulch Outlet.

FT1106BP 6" Post With Baseplate

Installation Instructions

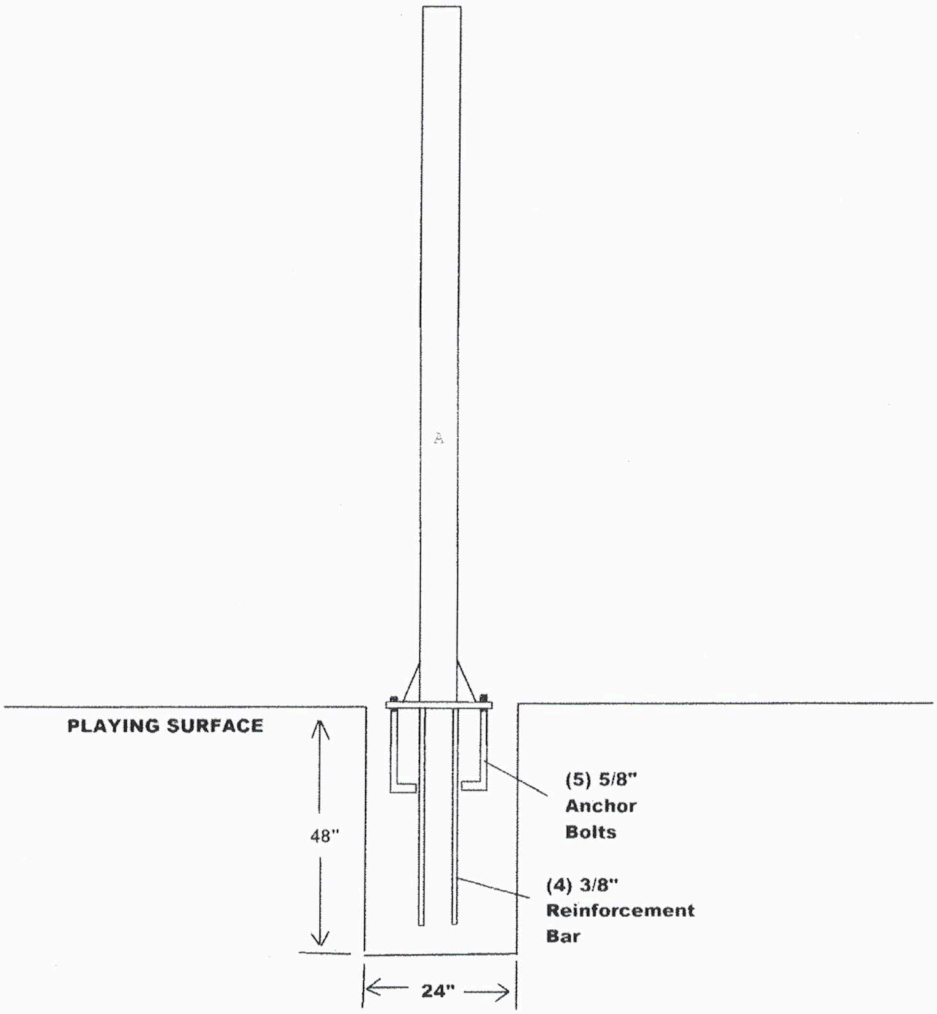

Bill of Materials

A(1) Vertical Post
B(5) Anchor Bolt (J-Bolt)
C(4) Reinforcing bar (rebar)
D(1) Anchor Template (5 hole style)
E(15) 5/8" Hex Nuts
F(5) 5/8" Lockwasher

*NOTE: Immediately unpack all components and cross check against bill of materials

1. Based on the overhang distance on the extension arm to be attached to this post, choose the proper location to dig for the concrete footing. You may need to refer to the installation instructions that came with the extension arm to determine overhang.

2. Dig hole 48" deep and 24" square. Be sure to bell out the bottom 12" of the hole to give added stability to the footing. NOTE: If you live in an area where the frost line is below 48" it is advisable to dig to normal frost line. Do not cheat on the hole size, it is imperative that the hole be a minimum of 48" deep and 24" square!

3. Assemble the anchor kit as shown in figure B. First thread a 5/8" hex nut (E) 2 ½" of the way on to each J-Bolt (B). Place the threaded end of each J-Bolt through the 5 holes located in the anchor template (D). Then thread a second 5/8" nut on to each J-Bolt until tight against the template, making sure to keep the J-Bolt hooks pointing in toward the center of the template.

4. For this step you will need: Level; Broomstick; Tape Measure. The 42" x 24" anchor footing will require approximately 1/3 yard of 3000 psi concrete (18-20 60# sacks of premix concrete). More will be needed if you dig a larger hole. Make certain that you have enough concrete to finish the job. Allowing a portion to dry while you purchase more concrete will weaken the footing.

5. Mix the concrete according to the instructions on the bag. It is better to mix it slightly wet than too dry. Fill the hole full to ground level with as little time between batches as possible. Insert the broomstick in 3 or 4 different places and vibrate up and down to settle the concrete. Submerge the (4) anchor footing rebar pieces (C) into the center of the hole spaced evenly approx. 8"x8" apart. Next set the anchor bolt assembly into the wet concrete, vibrate it as it goes in to make sure the concrete fills in around the J-Bolt hooks. Make sure the template is pressed firmly against the top of the wet concrete. Use the level to ensure that it is level in all directions. Additionally, the center line of the J-Bolts must be parallel with the edge of the playing surface. (See figure C)

STOP HERE! Allow footing to cure for seven days before proceeding.

6. Take off the top 5/8" nuts from the J-Bolts, remove the template and discard it.

7. Thread a second 5/8" nut on to each J-Bolt down against the nut embedded in the concrete.

8. Place the vertical post (A) down over the footing making sure not to damage the J-Bolt threads. Using (5) 5/8" lock washers and the final (5) 5/8" hex nuts, bolt down post finger tight.

9. Level the vertical post by adjusting the 5/8" nuts located underneath the base plate. Then tighten top nuts against the top side of the base plate.

10. Next, refer to the assembly instructions provided with the rest of your basketball system. Follow the instructions provided with your unit to complete assembly.

    Note: It is advisable to wait up to two weeks to allow the anchor footing to fully cure before aggressive play.

Figure B

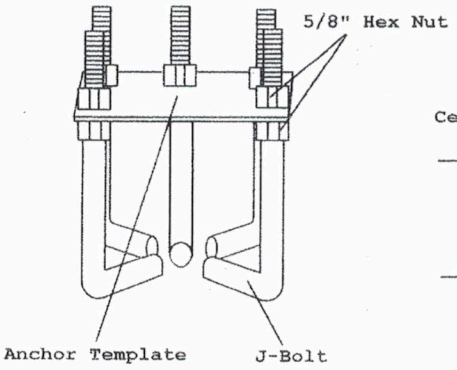
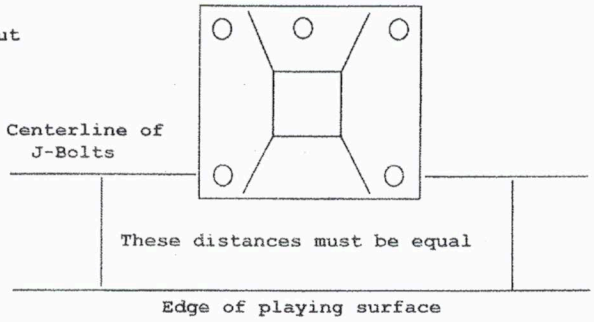
Figure C