RubberMulchOutlet.com
COMMERCIAL PLAYGROUNDS
SURFACING • SITE SOLUTIONS

MODEL-SPECIFIC

INSTALLATION INSTRUCTIONS

Installation Manual

Product-Specific Installation Reference

MODEL NUMBER	GUIDE LEVEL	DOCUMENT STATUS
PTC015	Model-Specific	Customer Reference Copy

Helpful Installation Note

This guide is provided for information and planning purposes. Product designs and installation requirements may change over time. Before beginning installation, please review the instructions included with your product and confirm that you are using the most current product-specific instructions. If there is any difference, follow the current instructions supplied with the product.

Need help confirming the correct guide? Contact Rubber Mulch Outlet.

Post Installation

STEP: 1

DO <u>NOT</u> CEMENT POSTS INTO PLACE UNTIL THE ENTIRE STRUCTURE IS ASSEMBLED. Refer to the General Installation guide footing information and dig proper holes for the support posts.	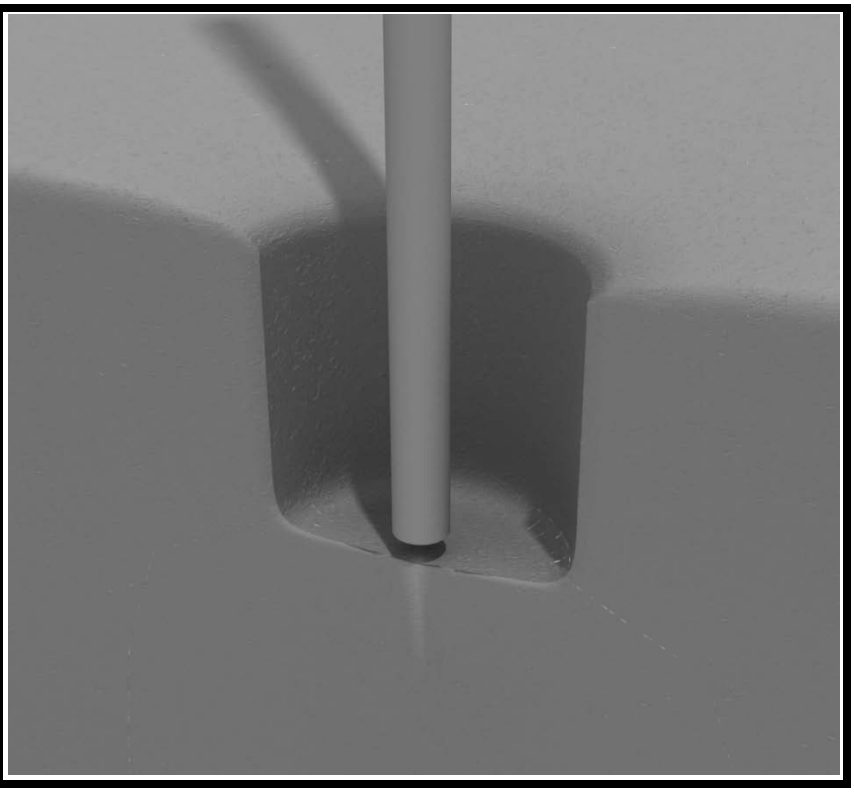

Date: 04/26/2018

3.5-inch Clamp Installation Examples

The following three pages will include examples of how to install some of the most common types of Clamps that are present on our structures that use 3.5-inch outside diameter posts. The structure that you are assembling might not require all the types of clamps listed in these examples.

The Install Guides for specific components that come later in this document might call for a specific type of clamp (a tube clamp for example), those sections will not include detailed instructions for the clamps and should direct you back to this section for more detailed information.

3.5-inch Flat Clamp Install Example

Connect half of the flat clamp to the component using one (1) M8*40 bolt. Then, using the other half of the flat clamp and the hardware provided in the clamp hardware bag, attach the backside of the flat clamp around the post.	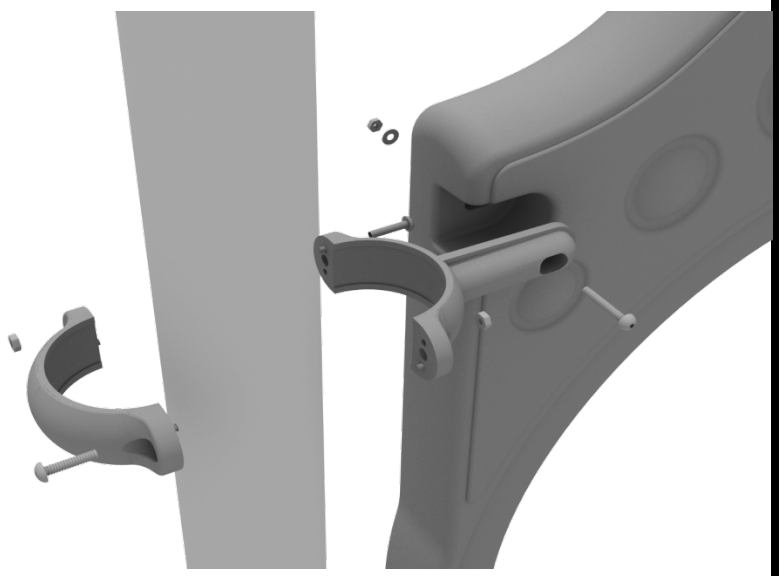

Date: 11/01/2018

3.5-inch Clamp Installation Examples

3.5-inch Tube Clamp Install Example

Connect half of the clamp to the component using one (1) M8*30 bolt. Then, using the other half of the tube clamp and the hardware provided in the clamp hardware bag, attach the backside of the tube clamp around the post.	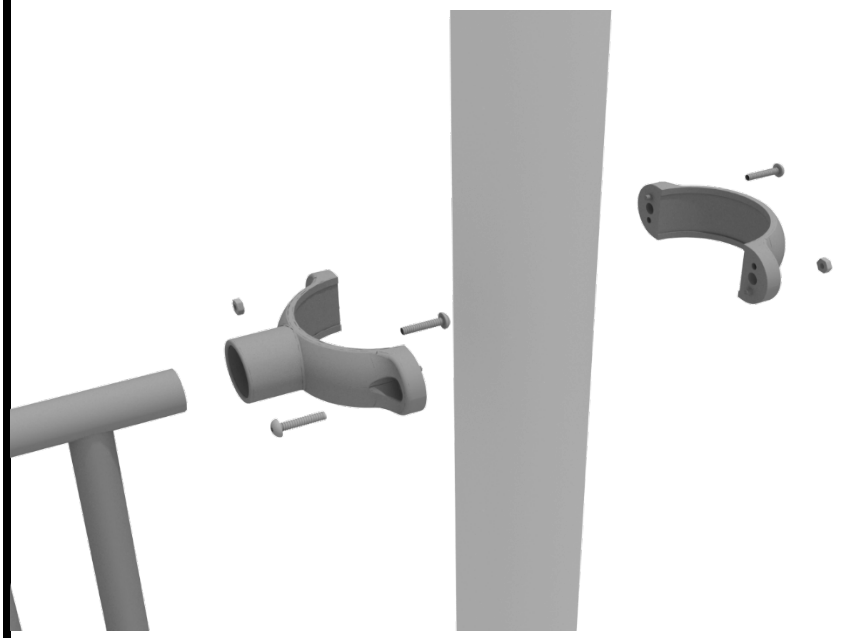

3.5-inch 90-Degree Flat Clamp Install Example

Connect half of the flat clamp to one panel using one (1) M8*40 bolt. Then, using the other half of the flat clamp and the hardware provided in the clamp hardware bag, attach the other half of the tube clamp around the post. Then, attach the next panel to the other side of the clamp using the same process.	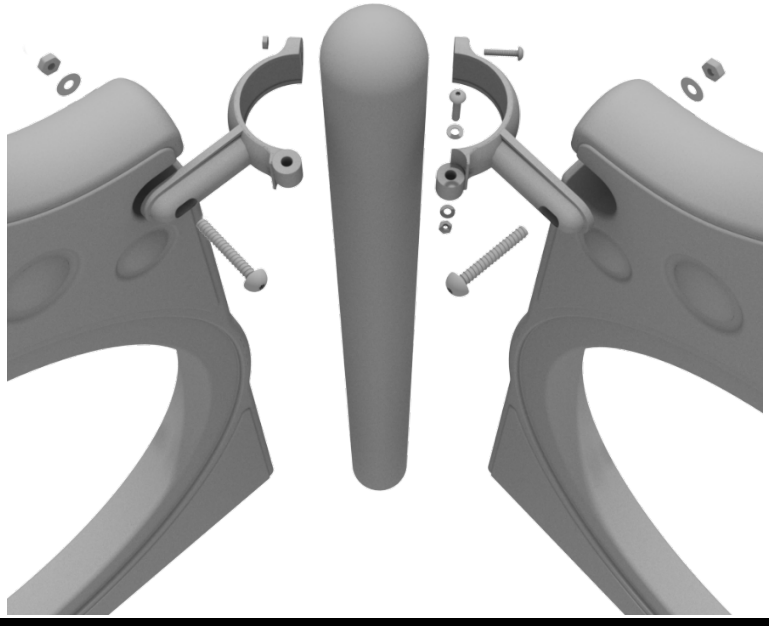

Date: 11/01/2018

3.5-inch Clamp Installation Examples

3.5-inch Double Slide Clamp Install Example

Connect half of the double slide clamp to the double slide hood using one (1) M8*30 bolt. Then, using the other half of the clamp and the hardware provided in the clamp hardware bag, attach the backside of the double slide clamp around the post.	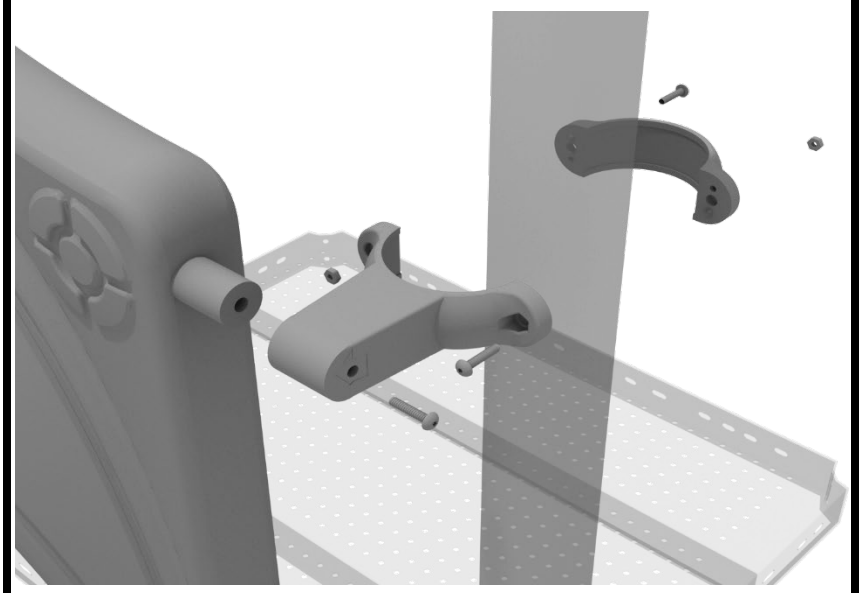

Date: 11/01/2018

Overhead Double Parallel Bar Installation

STEP: 1

Attach the Overhead Double Parallel Bar Ladder to the designated posts by connecting half of the tube clamp to the ladder using one (1) M8*30 bolt. Repeat this process for each attachment point. Set the ladder into place, then attach the second half of the clamp around the post.	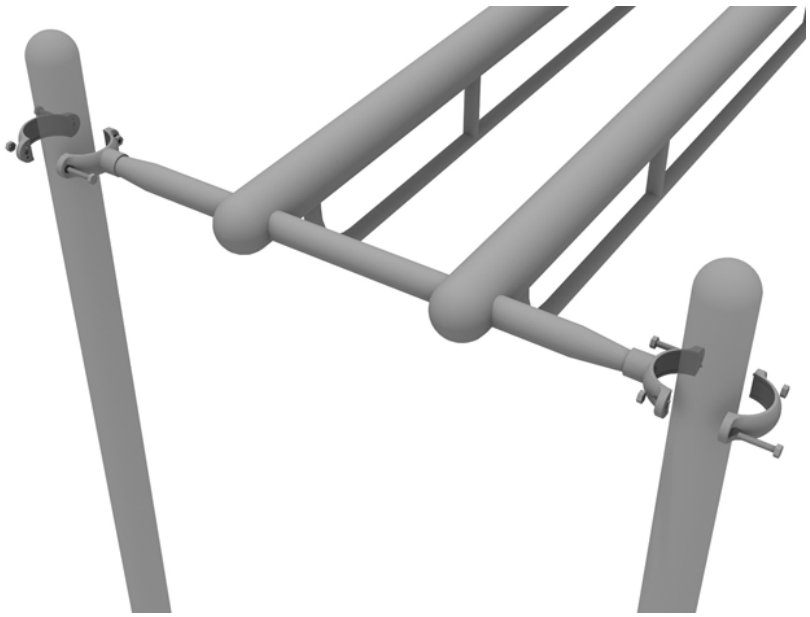

Date: 03/21/2018

Overhead Access Ladder Installation

STEP: 1

Attach the Overhead Access Ladder to the designated posts by connect half of the tube clamp to the ladder using one (1) M8*30 bolt. Repeat this process for each attachment point. Set the ladder into place, then attach the second half of the clamp around the post.	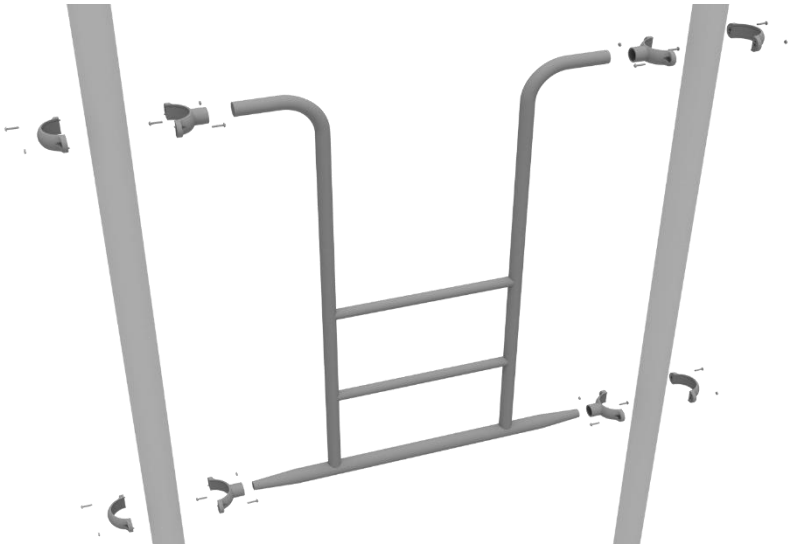

Date: 04/18/2018