RubberMulchOutlet.com
COMMERCIAL PLAYGROUNDS
SURFACING • SITE SOLUTIONS

MODEL-SPECIFIC

INSTALLATION INSTRUCTIONS

Installation Manual

Product-Specific Installation Reference

MODEL NUMBER	GUIDE LEVEL	DOCUMENT STATUS
PSL032	Model-Specific	Customer Reference Copy

Helpful Installation Note

This guide is provided for information and planning purposes. Product designs and installation requirements may change over time. Before beginning installation, please review the instructions included with your product and confirm that you are using the most current product-specific instructions. If there is any difference, follow the current instructions supplied with the product.

Need help confirming the correct guide? Contact Rubber Mulch Outlet.

Post Installation

STEP: 1

DO <u>NOT</u> CEMENT POSTS INTO PLACE UNTIL THE ENTIRE STRUCTURE IS ASSEMBLED. Refer to the General Installation guide footing information and dig proper holes for the support posts.	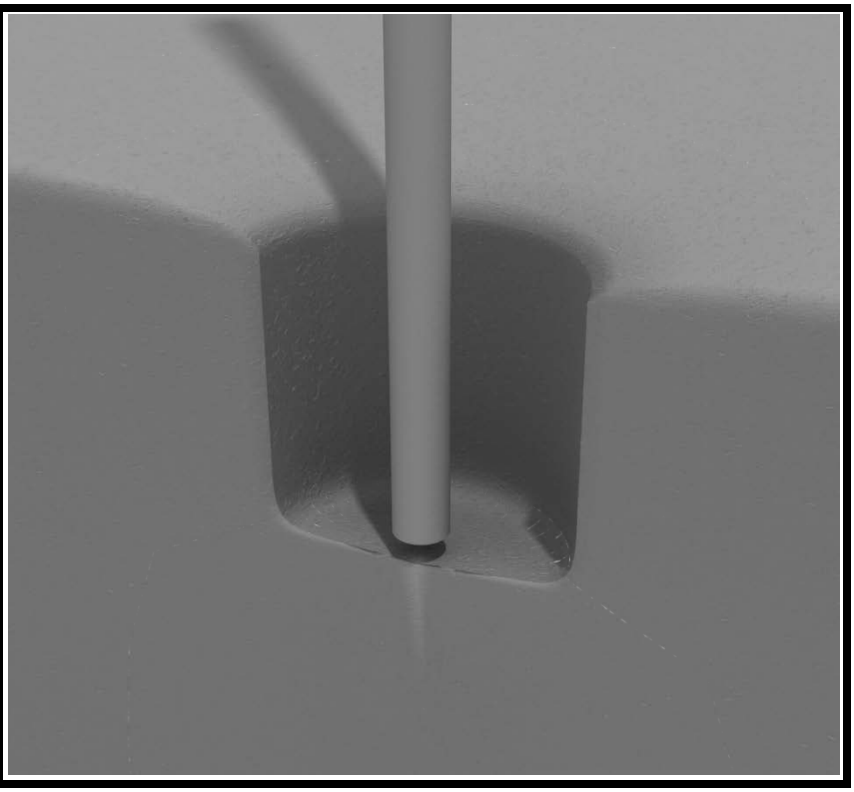

Date: 04/26/2018

5-foot Freestanding Wave Slide Installation

STEP 1

Install posts according to the General Information Guide. After installing the posts, using one (1) M10*35 bolt, two (2) M10 washers, and one (1) M10 lock nut, attach the deck to the pre-attached deck clamp, as shown in the image. Repeat this process for the other deck clamp.	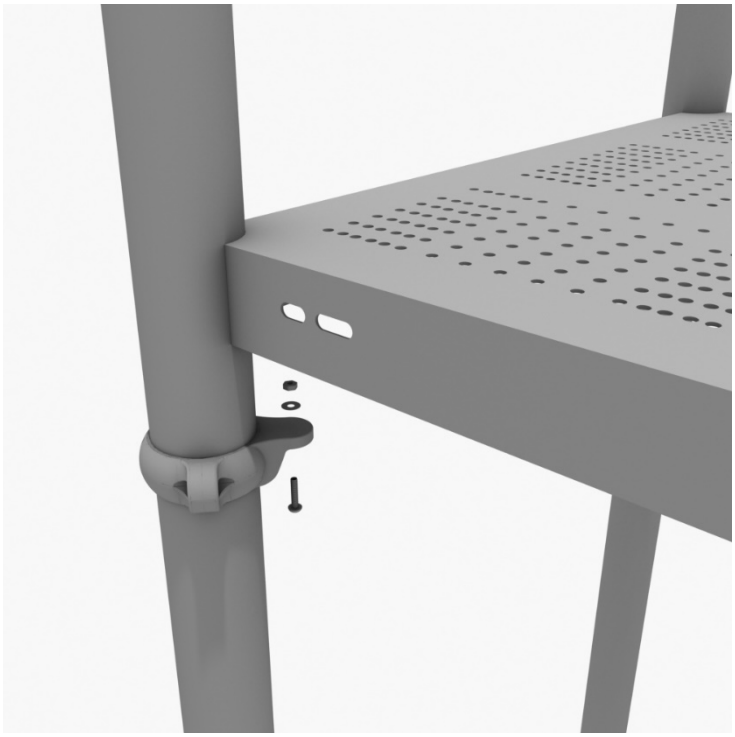

STEP 2

Connect half of the 3.5-inch tube clamp to the guardrail using one (1) M8*30 bolt. Set the guardrail into place, then attach the second half of the clamp using the hardware provided in the clamp bag.	

STEP 3

Using two (2) M10*25 bolts, four (4) M10 washers, and two (2) M10 lock nuts, connect the guardrail to the deck. Repeat steps 2 and 3 for the other guardrail.	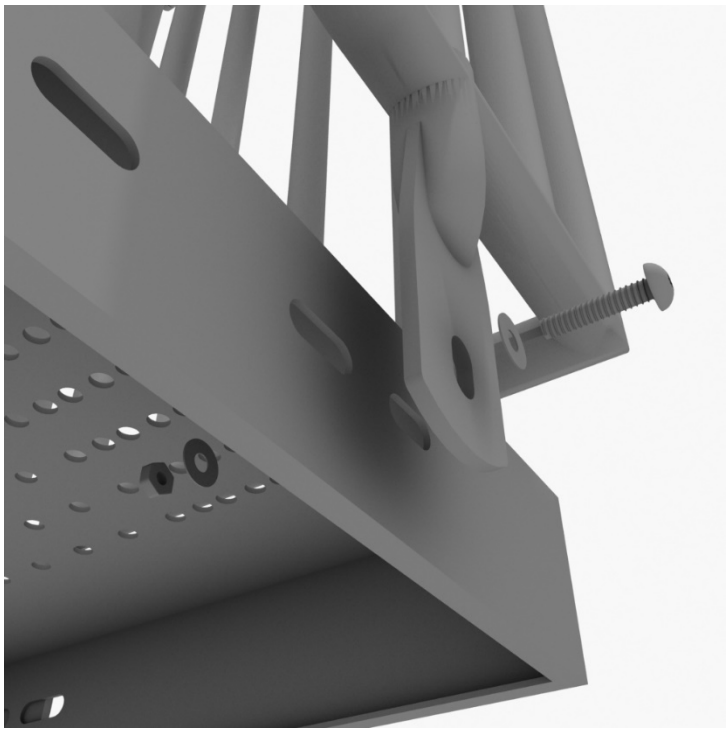

STEP 4

Using two (2) M10*25 bolts, four (4), and two (2) lock nuts, connect the handrail to the guardrail as shown. Set the bottom end of the handrail into footing. Information for digging footers can be found in the General Installation Guide.	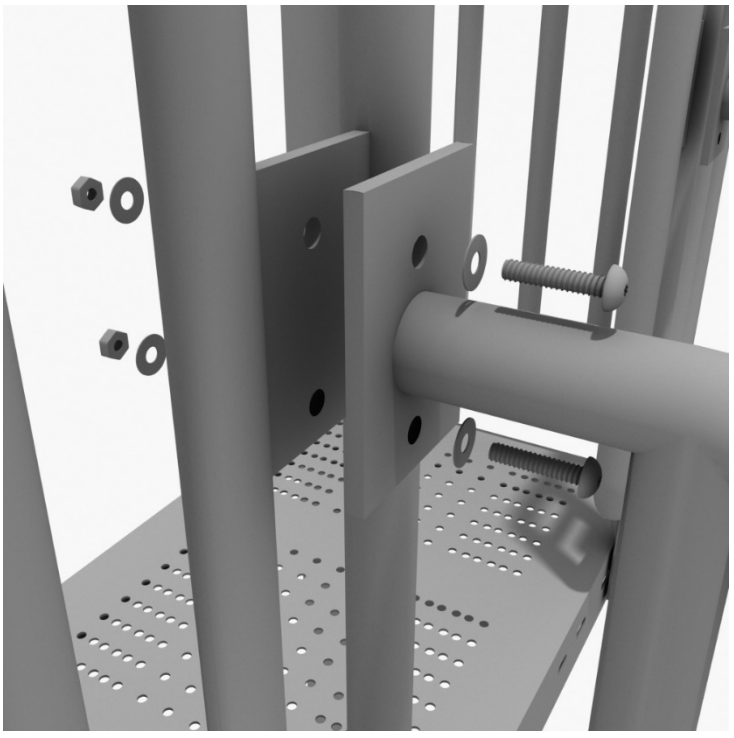

STEP 5

Using one (1) M10*25 bolt, two (2) M10 washers, and one (1) M10 lock nut, attach the top of the stairway to the deck on the opposite side of the posts. Repeat this step for remaining attachment points.	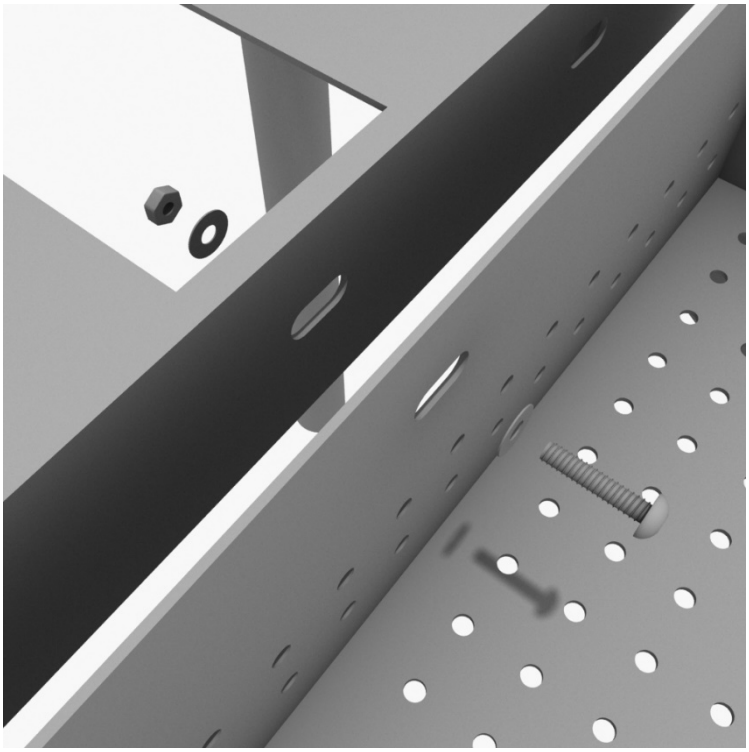

STEP 6

Using two (2) M10*25 bolts, four (4) M10 washers, and two (2) M10 lock nuts, connect the bottom of the handrail to the stair.	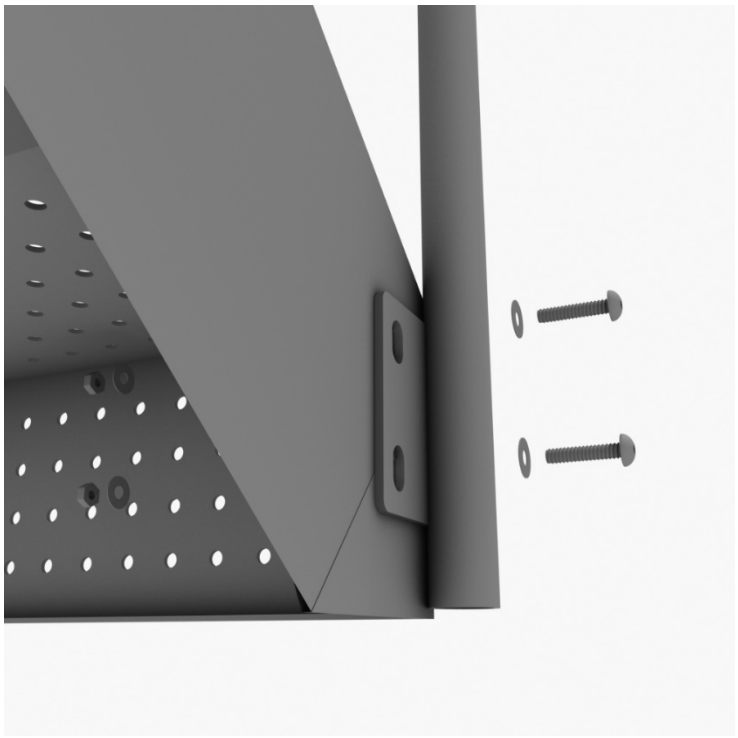

5-foot Freestanding Wave Slide Installation

STEP: 1

Take one (1) 3.5-inch flat clamp, and loosely attach it around a post using the bolts and nuts provided in the clamp hardware bag. Repeat this process on the other post. Then, use one (1) M8*40 bolt, one (1) M8 washer, and one (1) M8 lock nut to attach each side of the slide hood to each clamp. Leave bolts loose until slide is in place.	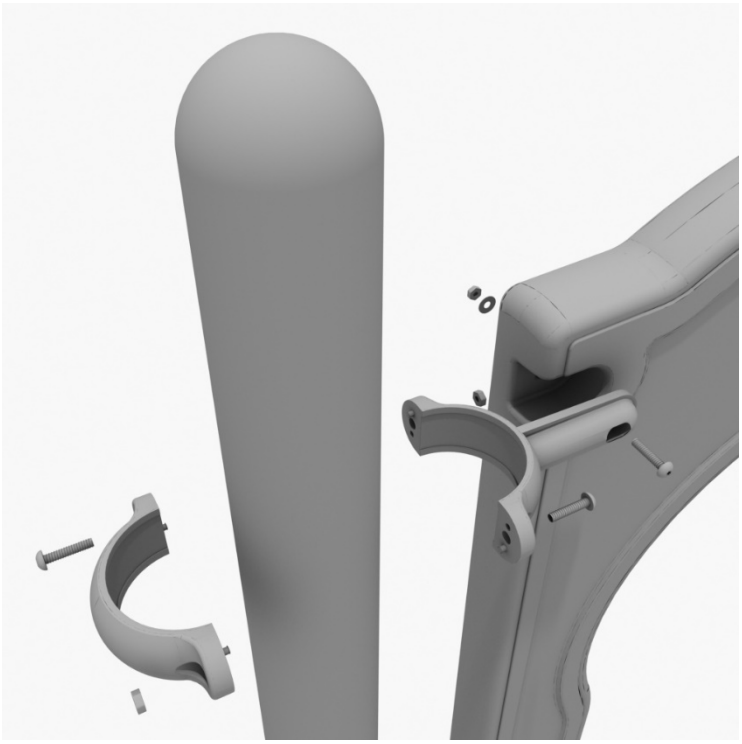

STEP: 2

See general installation guide regarding footing information for the slide end mount. Using two (2) M8*20, two (M8) spring gaskets. And two (2) M8 washers, attach the slide to the slide support post.	

Date: 03/19/2018

5-foot Freestanding Wave Slide Installation

STEP: 3

Using one (1) M10*45 bolt, two (2) M10 washers, and two (2) M10 lock nuts, attach one side of the slide to the deck.	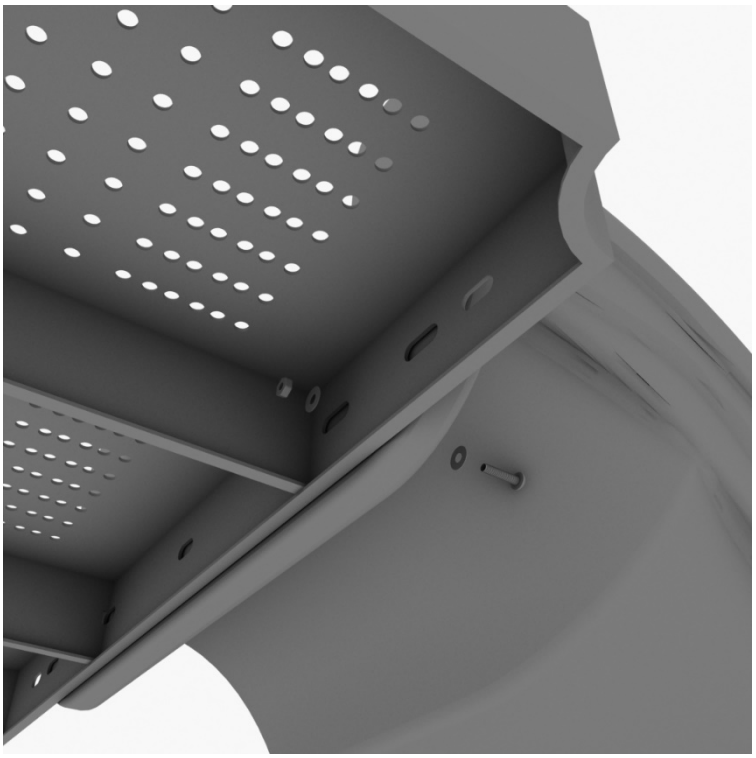

STEP: 4

Using one (1) M8*45 bolt, one (1) M8 washer, one (1) M12 washer, and one (1) M12 inner hex spiral nut, attach the slide to one side of the slide hood. Repeat this process for the other side of the slide.	

Date: 03/19/2018

Arch Snake Climber Installation

STEP: 1

See general installation guide regarding footing information for the Arch Snake climber. For the pre-threaded bolt slot, use one (1) M10*25 bolt, and one (1) M10 washer. For the other bolt slot, use one (1) M10*25 bolt, two (2) M10 washers, and one (1) M10 lock nut.	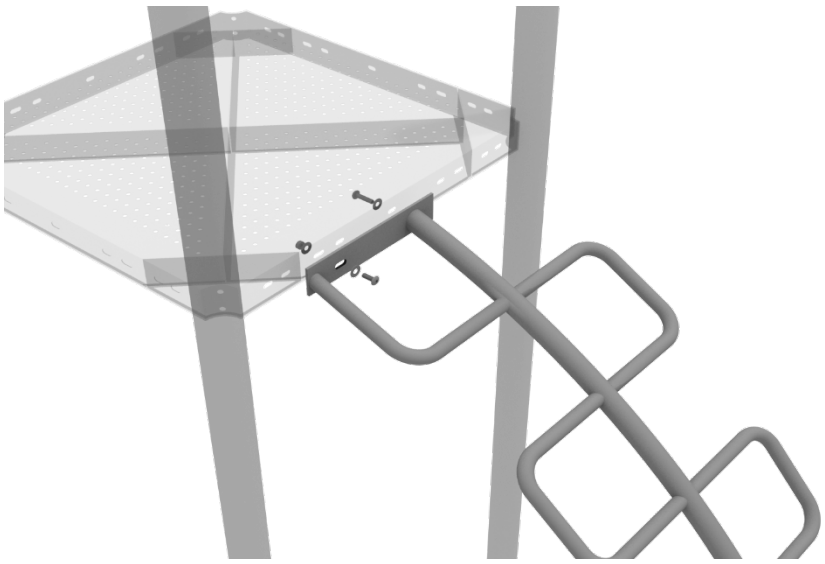

Date: 11/20/2020