RubberMulchOutlet.com
COMMERCIAL PLAYGROUNDS
SURFACING • SITE SOLUTIONS

MODEL-SPECIFIC

INSTALLATION INSTRUCTIONS

Installation Manual

Product-Specific Installation Reference

MODEL NUMBER	GUIDE LEVEL	DOCUMENT STATUS
PSL014	Model-Specific	Customer Reference Copy

Helpful Installation Note

This guide is provided for information and planning purposes. Product designs and installation requirements may change over time. Before beginning installation, please review the instructions included with your product and confirm that you are using the most current product-specific instructions. If there is any difference, follow the current instructions supplied with the product.

Need help confirming the correct guide? Contact Rubber Mulch Outlet.

Inground Post/Mount Installation

STEP: 1

DO NOT CEMENT POSTS/MOUNTS INTO PLACE UNTIL THE ENTIRE STRUCTURE IS ASSEMBLED.

Refer to the General Installation guide footing size information and digging proper holes for the support posts/mounts.

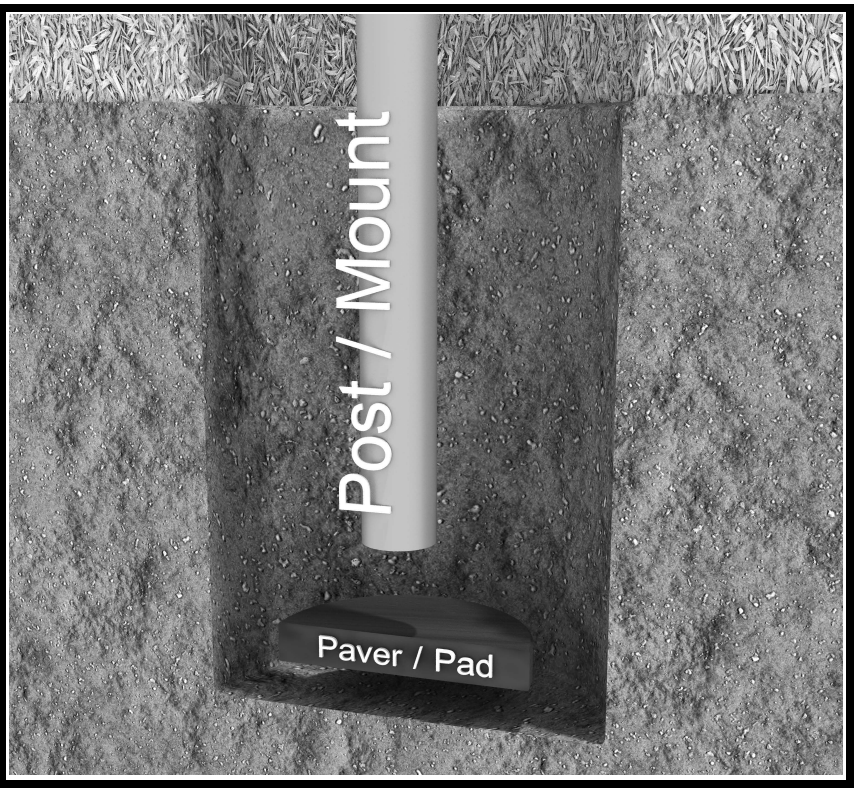

Date: 04/26/2018

4-foot Double Right Turn Slide Installation

STEP 1

Install posts according to the General Information Guide. After installing the posts, using one (1) M10*35 bolt, two (2) M10 washers, and one (1) M10 lock nut, attach the deck to the pre-attached deck clamp, as shown in the image. Repeat this process for the other deck clamp.	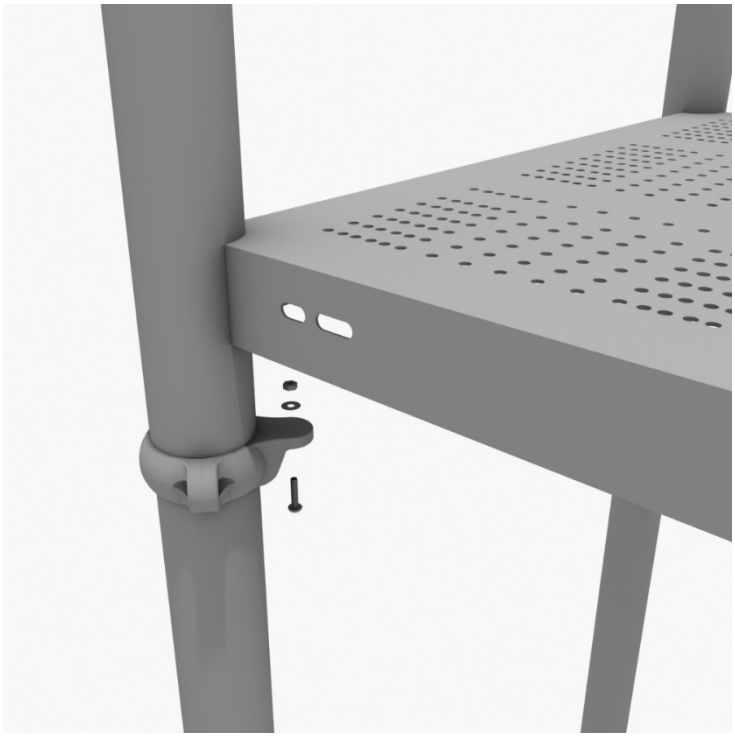

STEP 2

Connect half of the 3.5-inch tube clamp to the guardrail using one (1) M8*30 bolt. Set the guardrail into place, then attach the second half of the clamp using the hardware provided in the clamp bag.	

STEP 3

Using two (2) M10*25 bolts, four (4) M10 washers, and two (2) M10 lock nuts, connect the guardrail to the deck. Repeat steps 2 and 3 for the other guardrail.	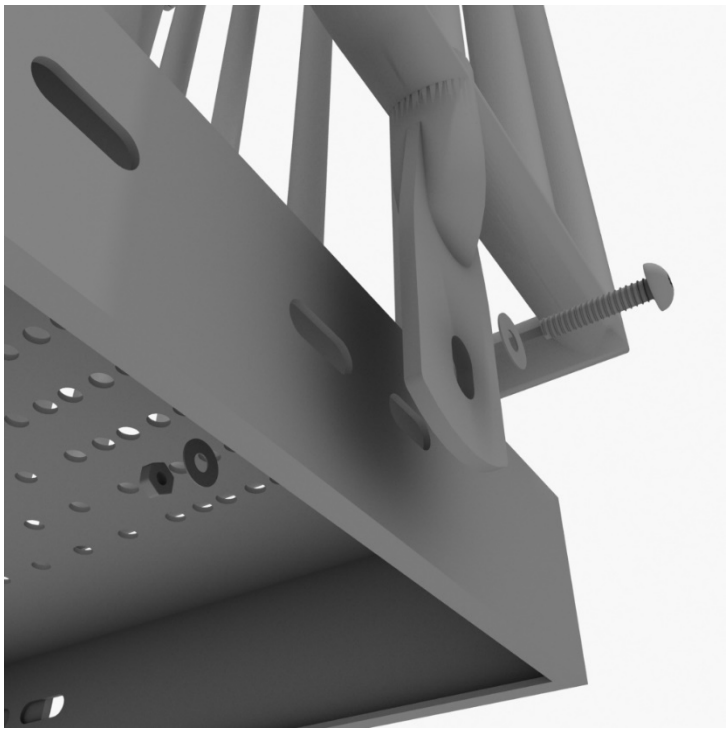

STEP 4

Using two (2) M10*25 bolts, four (4), and two (2) lock nuts, connect the handrail to the guardrail as shown. Set the bottom end of the handrail into footing. Information for digging footers can be found in the General Installation Guide.	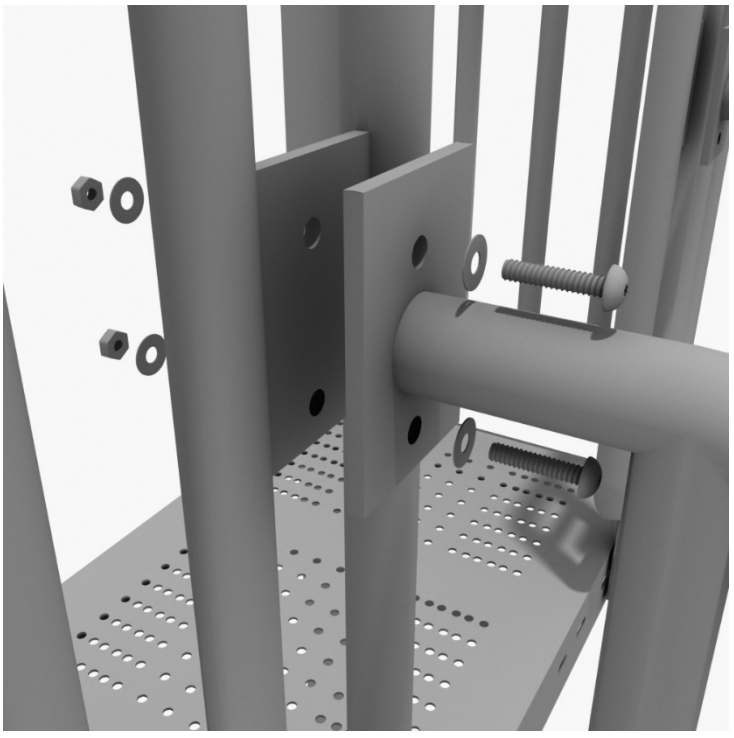

STEP 5

Using one (1) M10*25 bolt, two (2) M10 washers, and one (1) M10 lock nut, attach the top of the stairway to the deck on the opposite side of the posts. Repeat this step for remaining attachment points.	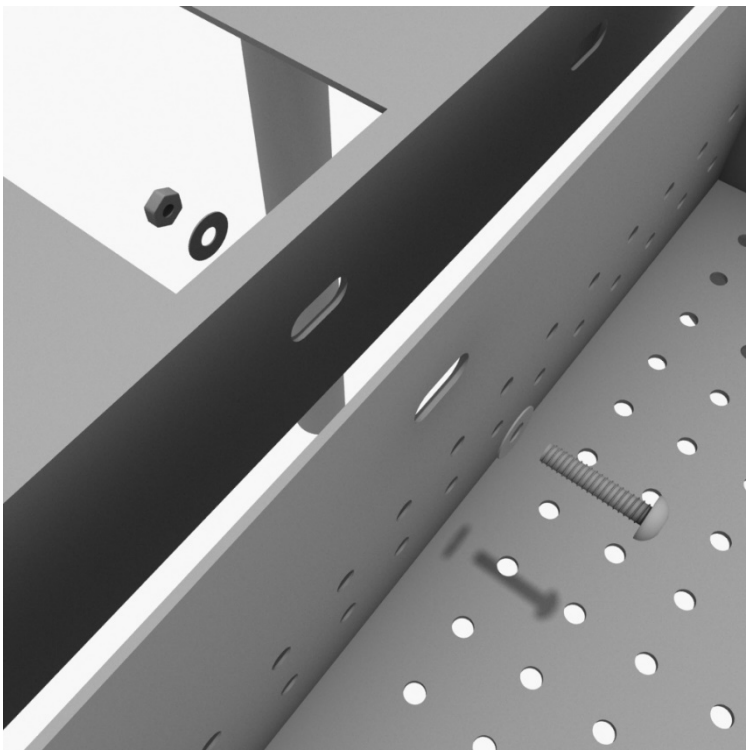

STEP 6

Using two (2) M10*25 bolts, four (4) M10 washers, and two (2) M10 lock nuts, connect the bottom of the handrail to the stair.	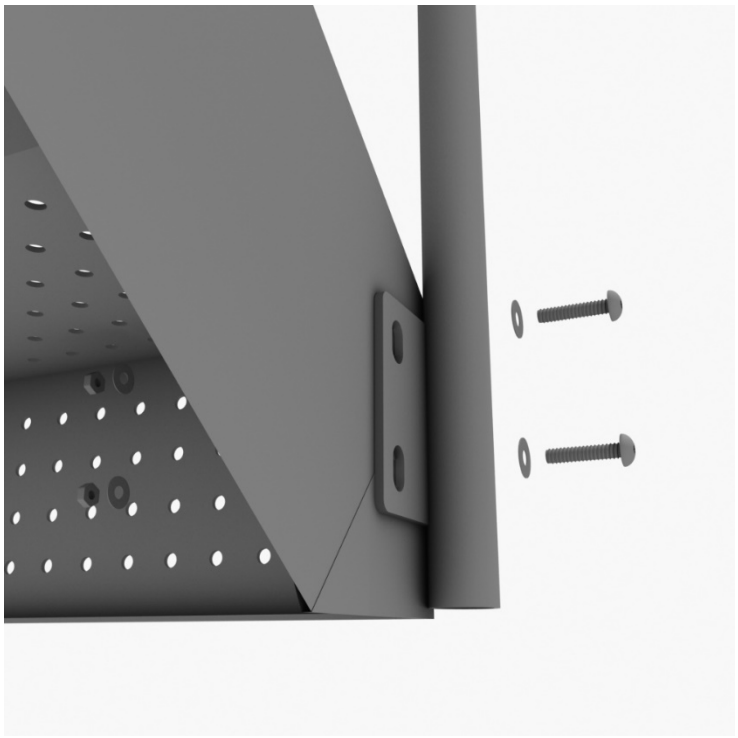

STEP: 7

Attach the deck climber extension to the proper deck using four (4) M10*25 bolts, eight (8) M10 washers, and four (4) M10 lock nuts.	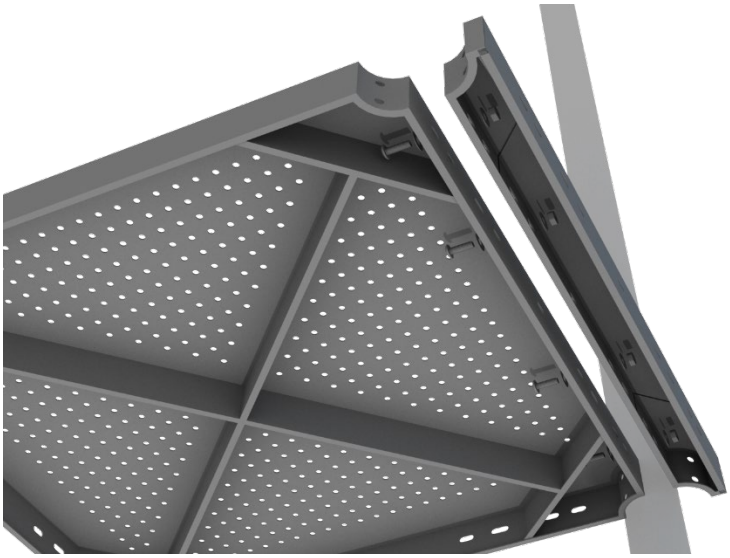

STEP: 8

Then, See general installation guide regarding footing information for the double slide end mounts. Using two (2) M8*20 bolts, two (2) M8 spring gaskets, and two (2) M8 washers, attach the slide end mounts to the double slide.	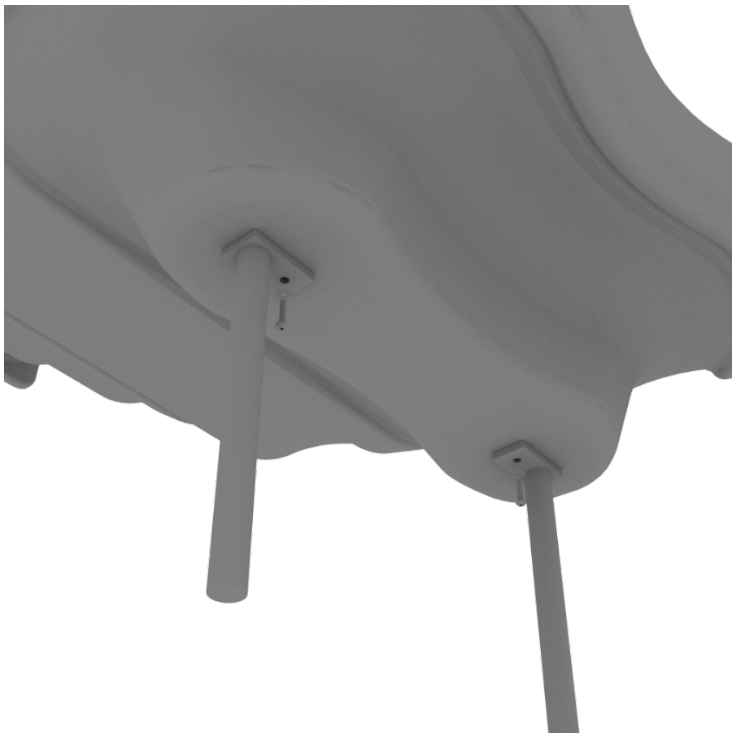

STEP: 9

Then, attach the slide to the deck extension using four (4) M10*45 bolts, eight (8) M10 washers, and four (4) M10 lock nuts.

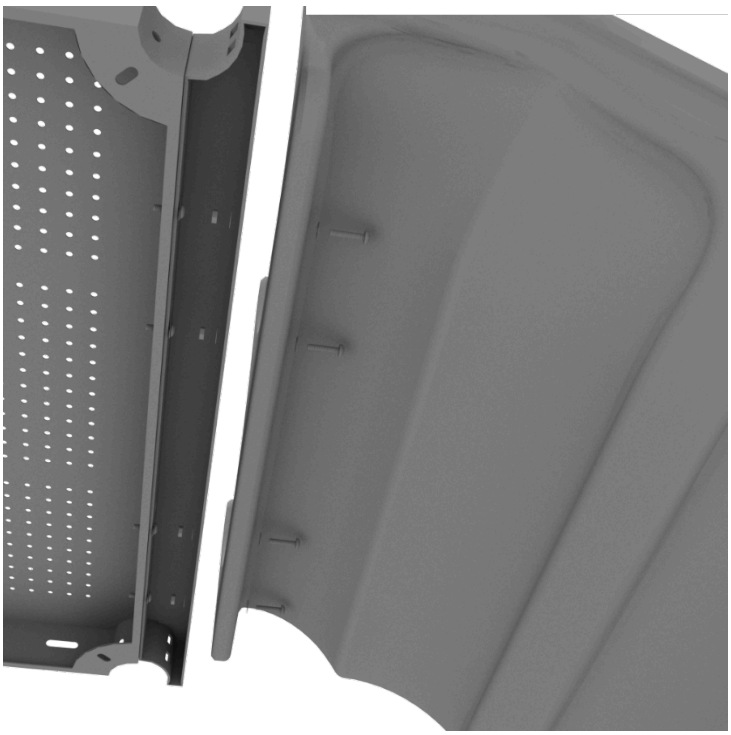

STEP: 10

Once the slide is attached, take the double slide hood and insert hood into the top of the slide, and then attach the top using two (2) double slide clamps, and two (2) M8*30 bolts.

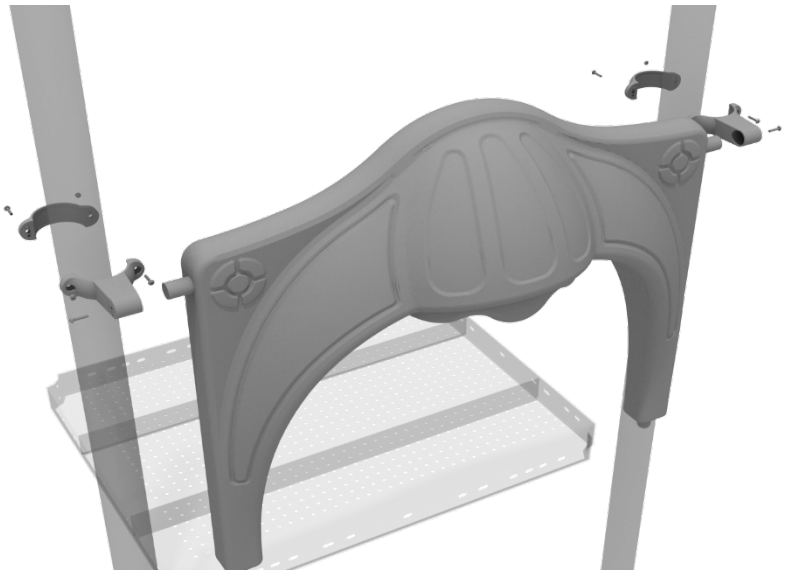

Date: 04/10/2018