RubberMulchOutlet.com
COMMERCIAL PLAYGROUNDS
SURFACING • SITE SOLUTIONS

MODEL-SPECIFIC

INSTALLATION INSTRUCTIONS

Installation Manual

Product-Specific Installation Reference

MODEL NUMBER	GUIDE LEVEL	DOCUMENT STATUS
PSL012	Model-Specific	Customer Reference Copy

Helpful Installation Note

This guide is provided for information and planning purposes. Product designs and installation requirements may change over time. Before beginning installation, please review the instructions included with your product and confirm that you are using the most current product-specific instructions. If there is any difference, follow the current instructions supplied with the product.

Need help confirming the correct guide? Contact Rubber Mulch Outlet.

Inground Post/Mount Installation

STEP: 1

DO NOT CEMENT POSTS/MOUNTS INTO PLACE UNTIL THE ENTIRE STRUCTURE IS ASSEMBLED.

Refer to the General Installation guide footing size information and digging proper holes for the support posts/mounts.

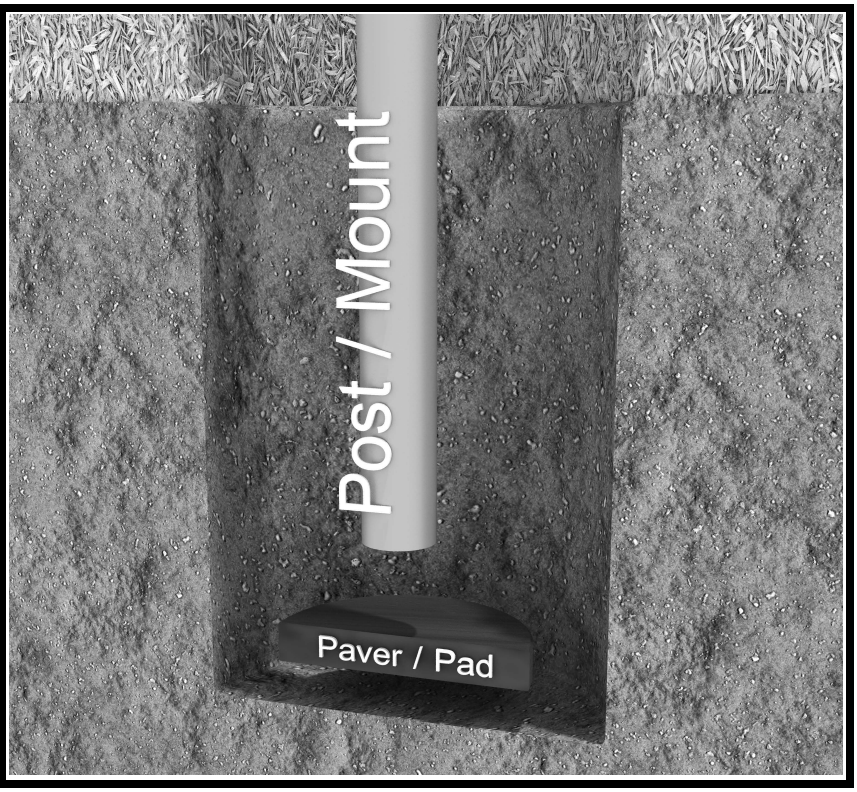

Date: 04/26/2018

3.5-inch Clamp Installation Examples

The following three pages will include examples of how to install some of the most common types of Clamps that are present on our structures that use 3.5-inch outside diameter posts. The structure that you are assembling might not require all the types of clamps listed in these examples.

The Install Guides for specific components that come later in this document might call for a specific type of clamp (a tube clamp for example), those sections will not include detailed instructions for the clamps and should direct you back to this section for more detailed information.

3.5-inch Flat Clamp Install Example

Connect half of the flat clamp to the component using one (1) M8*40 bolt. Then, using the other half of the flat clamp and the hardware provided in the clamp hardware bag, attach the backside of the flat clamp around the post.	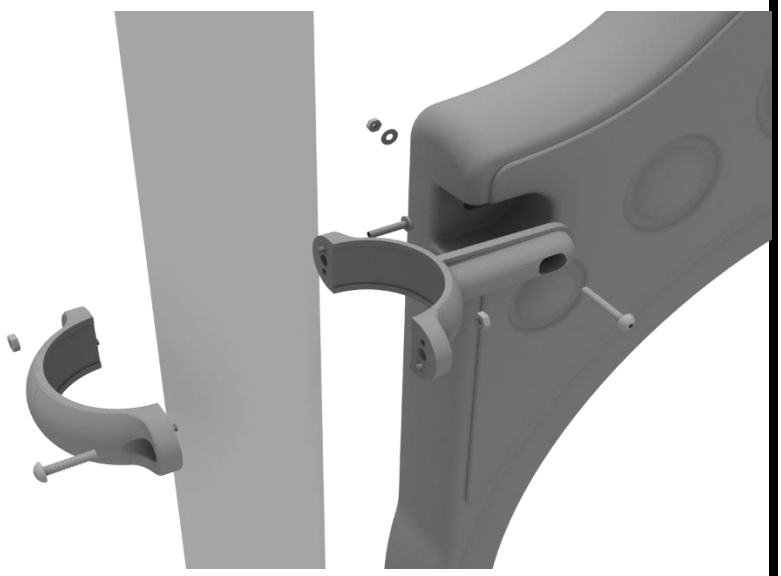

Date: 11/01/2018

3.5-inch Clamp Installation Examples

3.5-inch Tube Clamp Install Example

Connect half of the clamp to the component using one (1) M8*30 bolt. Then, using the other half of the tube clamp and the hardware provided in the clamp hardware bag, attach the backside of the tube clamp around the post.	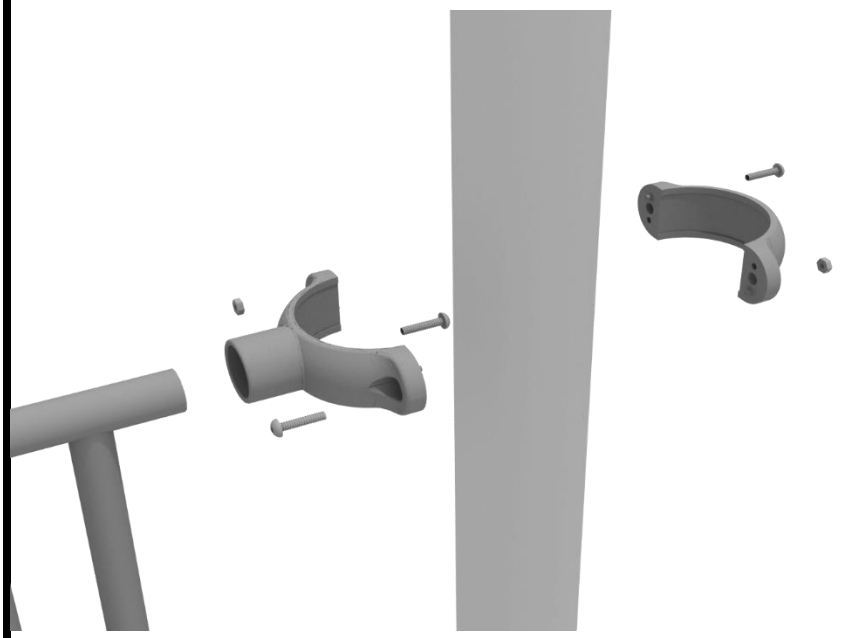

3.5-inch 90-Degree Flat Clamp Install Example

Connect half of the flat clamp to one panel using one (1) M8*40 bolt. Then, using the other half of the flat clamp and the hardware provided in the clamp hardware bag, attach the other half of the tube clamp around the post. Then, attach the next panel to the other side of the clamp using the same process.	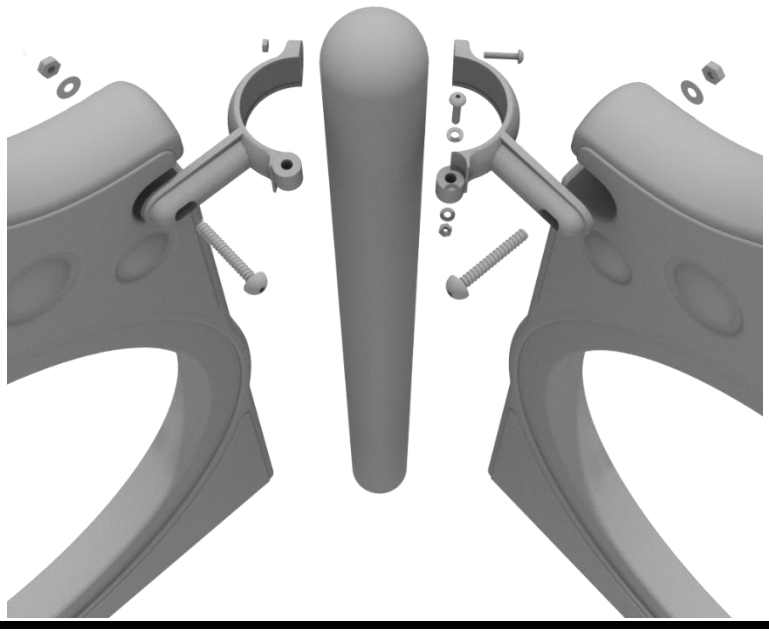

Date: 11/01/2018

3.5-inch Clamp Installation Examples

3.5-inch Double Slide Clamp Install Example

Connect half of the double slide clamp to the double slide hood using one (1) M8*30 bolt. Then, using the other half of the clamp and the hardware provided in the clamp hardware bag, attach the backside of the double slide clamp around the post.	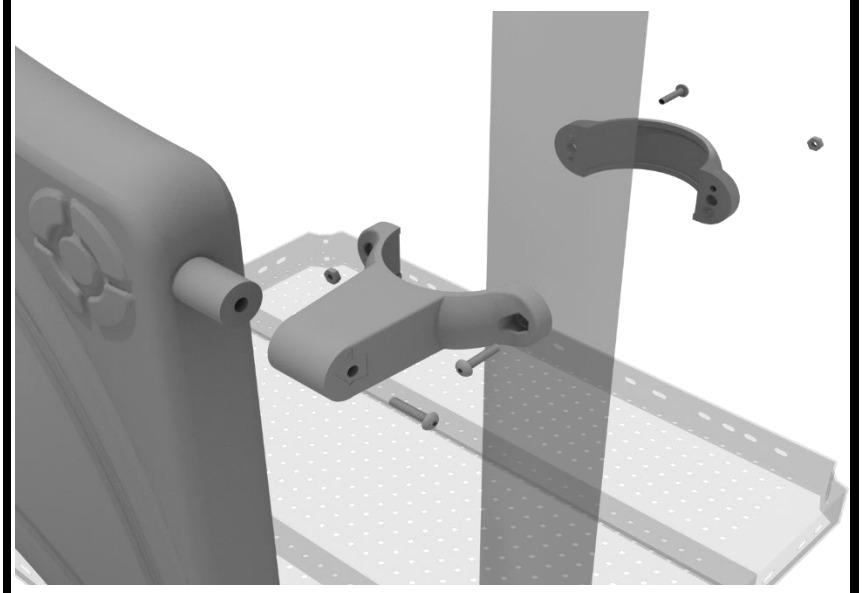

Date: 11/01/2018

3-foot Left Turn Slide Installation

STEP 1

Install posts according to the General Information Guide. After installing the posts, using one (1) M10*35 bolt, two (2) M10 washers, and one (1) M10 lock nut, attach the deck to the pre-attached deck clamp, as shown in the image. Repeat this process for the other deck clamp.	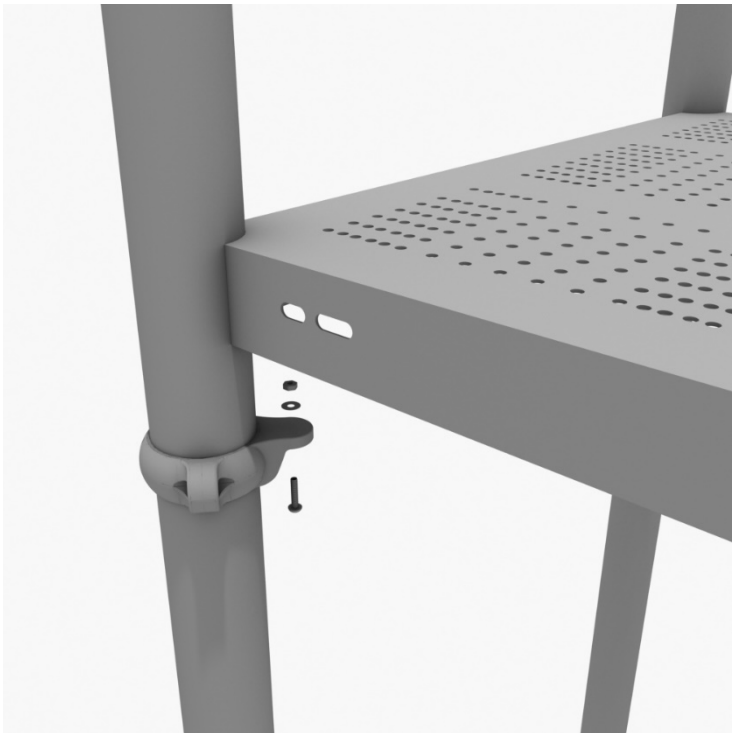

STEP 2

Connect half of the 3.5-inch tube clamp to the guardrail using one (1) M8*30 bolt. Set the guardrail into place, then attach the second half of the clamp using the hardware provided in the clamp bag.	

STEP 3

Using two (2) M10*25 bolts, four (4) M10 washers, and two (2) M10 lock nuts, connect the guardrail to the deck. Repeat steps 2 and 3 for the other guardrail.	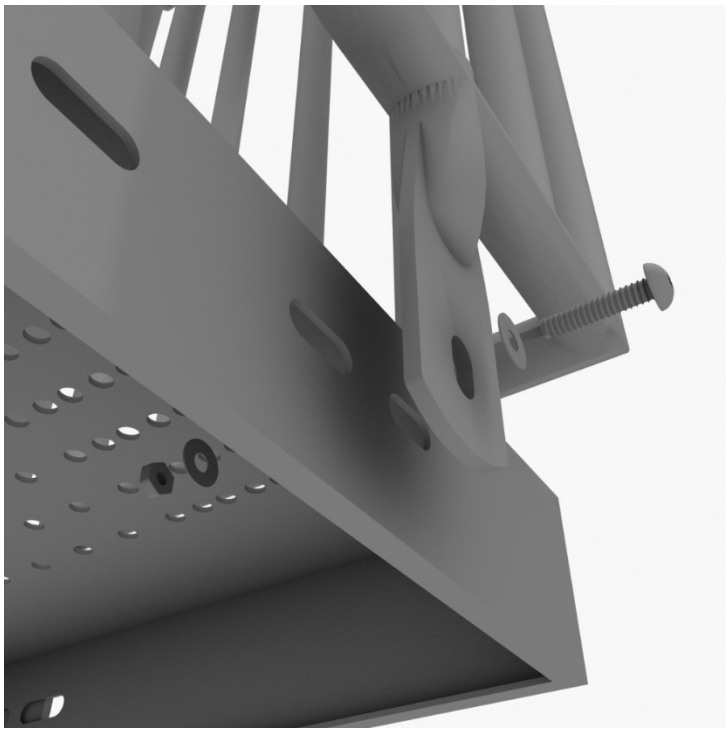

STEP 4

Using two (2) M10*25 bolts, four (4), and two (2) lock nuts, connect the handrail to the guardrail as shown. Set the bottom end of the handrail into footing. Information for digging footers can be found in the General Installation Guide.	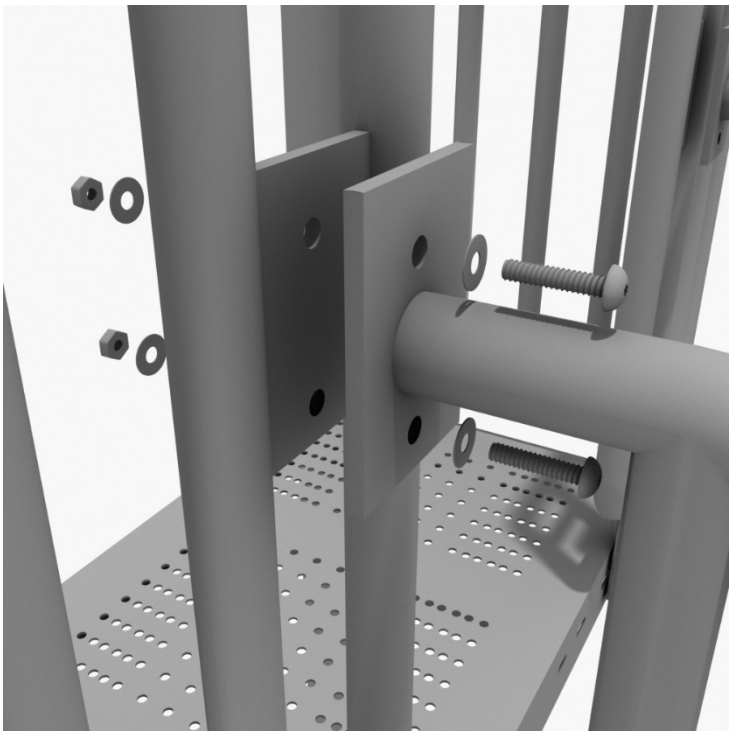

STEP 5

Using one (1) M10*25 bolt, two (2) M10 washers, and one (1) M10 lock nut, attach the top of the stairway to the deck on the opposite side of the posts. Repeat this step for remaining attachment points.	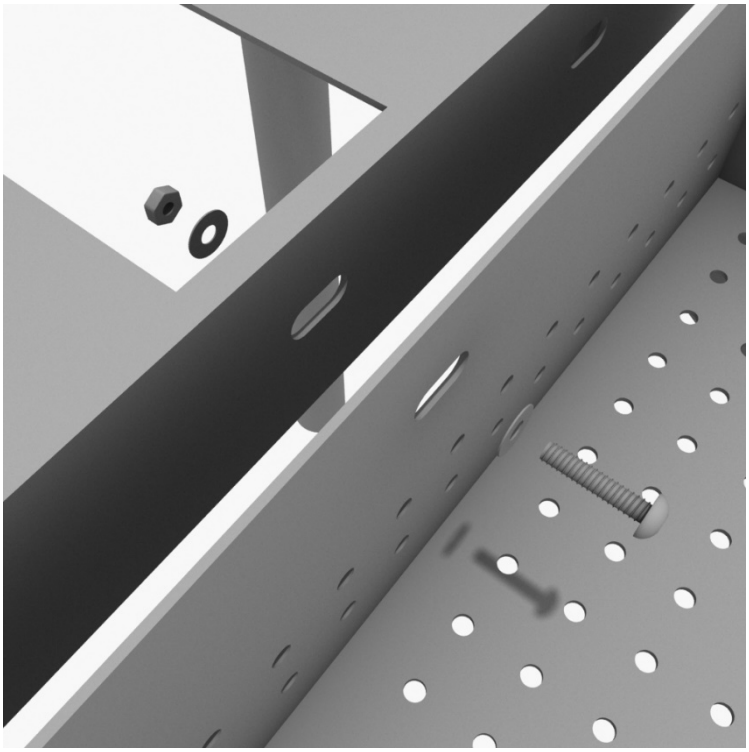

STEP 6

Using two (2) M10*25 bolts, four (4) M10 washers, and two (2) M10 lock nuts, connect the bottom of the handrail to the stair.	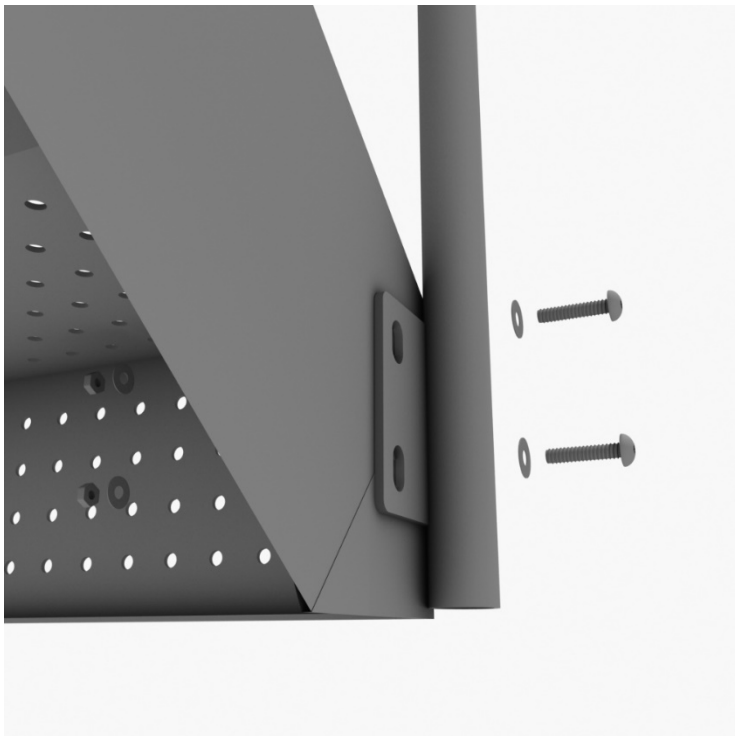

3-foot Left Turn Slide Installation

STEP: 1

Take one (1) 3.5-inch flat clamp, and loosely attach it around a post using the bolts and nuts provided in the clamp hardware bag. Repeat this process on the other post. Then, use one (1) M8*40 bolt, one (1) M8 washer, and one (1) M8 lock nut to attach each side of the slide hood to each clamp. Leave bolts loose until slide is in place.	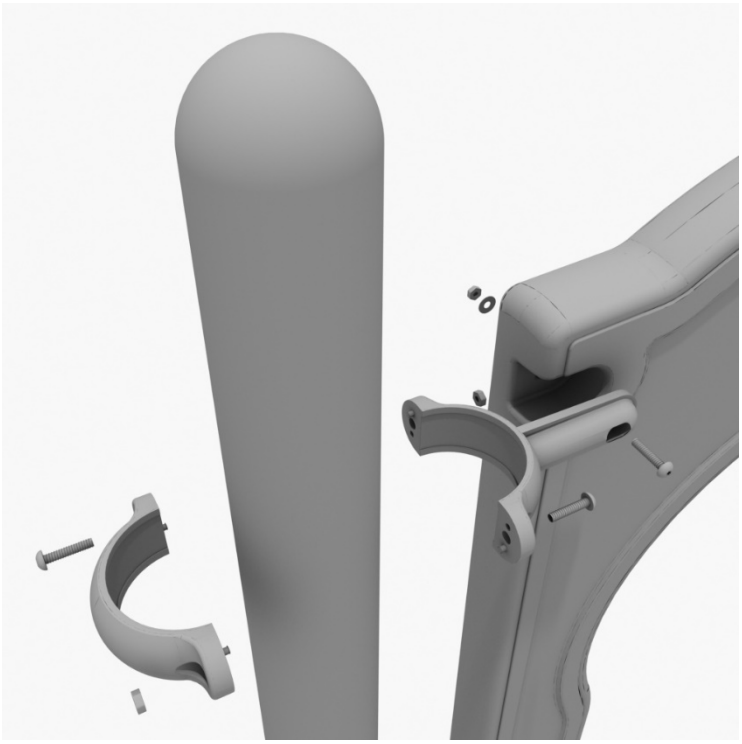

STEP: 2

See general installation guide regarding footing information for the slide end mount. Using two (2) M8*20, two (M8) spring gaskets. And two (2) M8 washers, attach the slide to the slide support post.	

Date: 03/19/2018

3-foot Left Turn Slide Installation

STEP: 3

Using one (1) M10*45 bolt, two (2) M10 washers, and two (2) M10 lock nuts, attach one side of the slide to the deck.	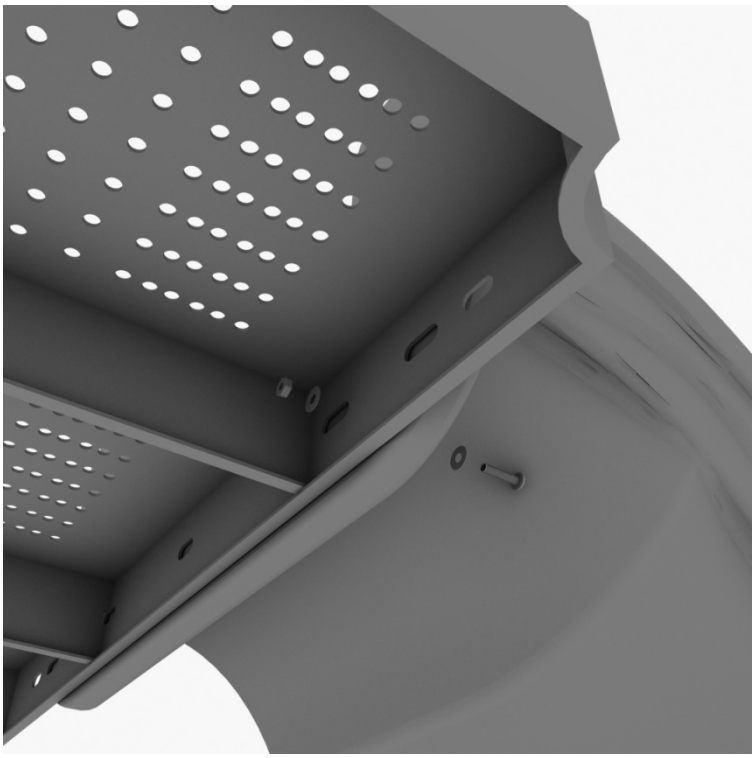

STEP: 4

Using one (1) M8*45 bolt, one (1) M8 washer, one (1) M12 washer, and one (1) M12 inner hex spiral nut, attach the slide to one side of the slide hood. Repeat this process for the other side of the slide.	

Date: 03/19/2018